WLCA-2M-U-CE

Water Level Controller

DIN 35mm

Features :

- Pump Protection From Dry Run and Overflow Condition
- Specially Designed Sensors
- Trip Relay & Alarm Relay Indication
- 5A SPST Output Relay (Resistive)
- Manual Start Switch Facility
- Water Levels & Trip Indication LED's
- Used for Two Tank Monitoring, Single Tank Water Level Monitoring
- Selectable Suction and Delivery Mode in Single Tank Operation

Display Specifications

Type	Analog
No. of LED	4
No. of Key	1

LED Indication Chart

LED Colour	Notation	Indication
Green	ON	Power ON
Yellow1	S	Suction Tank Level Indication
Yellow2	D	Delivery Tank Level Indication
Red	R	Relay Indication

Input Specifications

Functions	
Function	The product operates in following modes 1) Single Tank Mode Suction logic : Single level, Two level, With / without alarm Delivery logic : Single level, Two level, With / without alarm 2) Dual Tank Mode
Input Sensor	Stainless steel prods
Time Setting	
Trip Settings	According to the levels of sensor placed in the water tank
Recovery Time	2sec
Reset	Automatic
Accuracy	
Trip Time Delay	2sec (approx.)
Time Accuracy	±5% of 2 sec

Output Specifications

Relay Contact	1 NO (Resistive)
Relay Rating	5A@250VAC / 28VDC

Auxiliary Supply Specifications

Supply Voltage	85 to 270V AC / DC
Frequency	50 / 60Hz
Power Consumption	4VA max

Environmental Specifications

Temperature	Operating Temperature : 0^0 to 50^0C Storage Temperature : -20^0 to 70^0C
Humidity (non - condensing)	Upto 95% RH
Pollution Degree	
For PCB	2
For Product	3
Degree of Protection Devices	IP20

Mechanical Specifications

Mounting	DIN Rail
Weight	Sensors : 50gms each Unit : 100gms
Screw Tightening Torque	0.5 NM

Dimensions

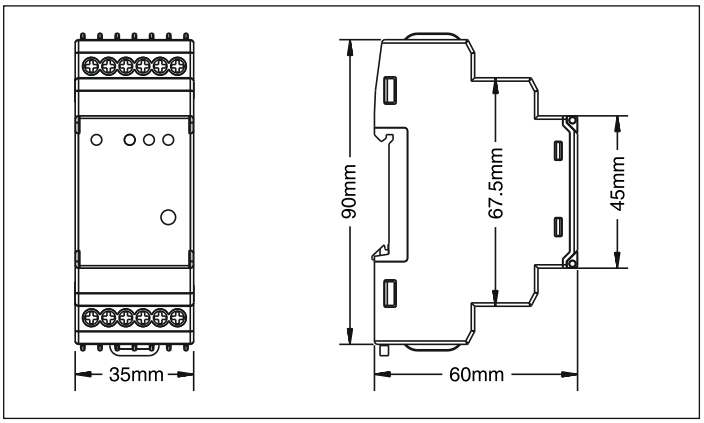

Terminal Connection

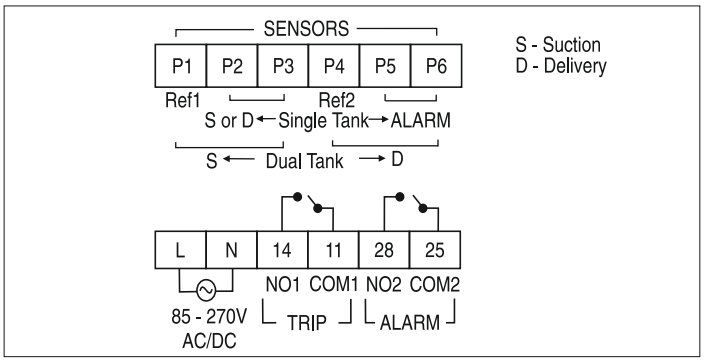

Input Sensor Dimensions

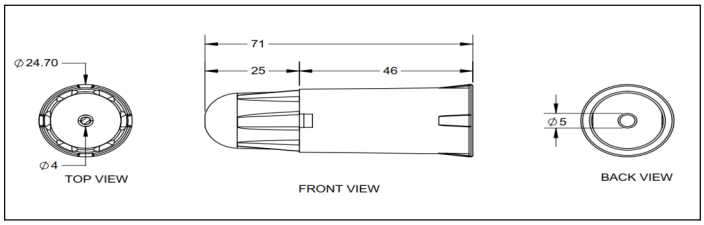

SINGLE TANK SINGLE LEVEL_SUCTION LOGIC

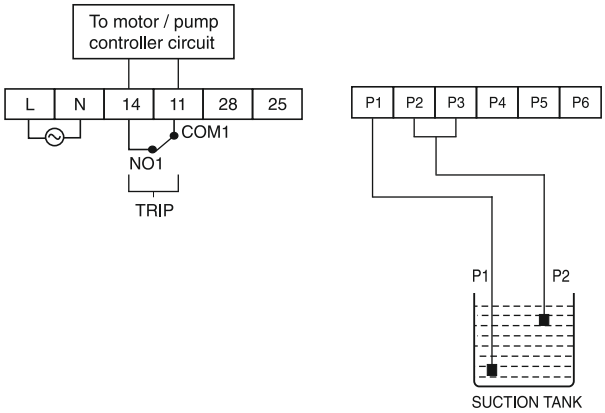

NOTE :
- P4, P5 & P6 are kept open.
- Sensor P3 is shorted with sensor P2, to act as single level measurement sensor.

TESTING CHART

Sr. No.	P1	P2= P2+P3	Relay1 Status	Relay2 Status	LED1	LED2	LED3	LED4	Remark
					Power ON	Suction	Delivery	Relay	
1	IN	OUT	OFF	ON	ON	Fast Blinking	OFF	OFF	Relay2 will be OFF Continuosly
2	IN	IN	ON	ON	ON	ON	OFF	ON	

SINGLE TANK TWO LEVEL _SUCTION LOGIC

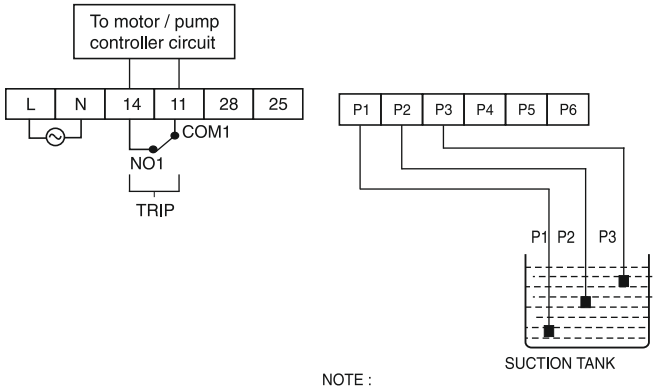

NOTE :
- P4, P5 & P6 are kept open.
- Measurement is done with sensor P2 & P3 for different liquid levels, considering P1 as reference.

TESTING CHART

Sr.No.	P1	SENSOR CONDITION		Relay1 Status	Relay2 Status	LED1	LED2	LED3	LED4
		P2	P3			Power ON	Suction	Delivery	Relay
1	IN	OUT	OUT	OFF	ON	ON	Fast Blinking	OFF	OFF
2	IN	IN	OUT	OFF	ON	ON	Slow Blinking	OFF	OFF
3	IN	IN	IN	ON	ON	ON	ON	OFF	ON
4	IN	IN	OUT	ON	ON	ON	Slow Blinking	OFF	ON
5	IN	OUT	OUT	OFF	ON	ON	Fast Blinking	OFF	OFF

SINGLE TANK TWO LEVEL with alarm_SUCTION LOGIC

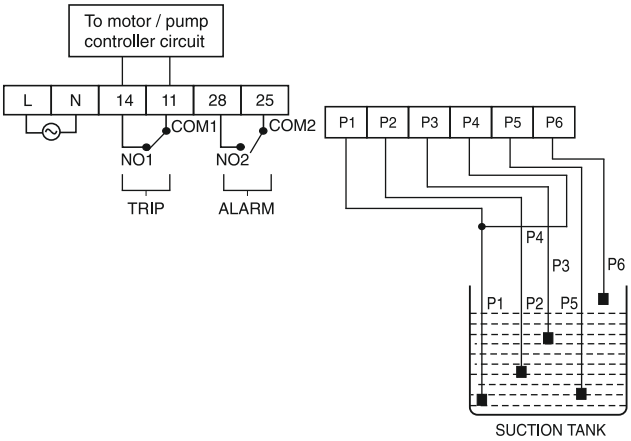

NOTE :
- Sensor P1+P4 are shorted so as to act as single reference.
- Sensor P5 & P6 are considered to indicate alarm condition.
- Measurement is done with sensor P2 & P3 for different level indication.

TESTING CHART

Sr.no.	P1= P1+P4	SENSOR CONDITION				Relay1 Status	Relay2 Status	LED1	LED2	LED3	LED4
		P2	P3	P5	P6			Power ON	Suction	Delivery	Relay
1	IN	OUT	OUT	OUT	OUT	OFF	ON	ON	Fast Blinking	OFF	OFF
2	IN	OUT	OUT	IN	OUT	OFF	OFF	ON	Fast Blinking	OFF	OFF
3	IN	IN	OUT	IN	OUT	OFF	OFF	ON	Slow Blinking	OFF	OFF
4	IN	IN	IN	IN	OUT	ON	OFF	ON	ON	OFF	ON
5	IN	IN	IN	IN	IN	ON	ON	ON	ON	OFF	ON
6	IN	IN	IN	IN	OUT	ON	OFF	ON	ON	OFF	ON
7	IN	IN	OUT	IN	OUT	ON	OFF	ON	Slow Blinking	OFF	ON
8	IN	OUT	OUT	IN	OUT	OFF	OFF	ON	Fast Blinking	OFF	OFF
9	IN	OUT	OUT	OUT	OUT	OFF	ON	ON	Fast Blinking	OFF	OFF

SINGLE TANK SINGLE LEVEL_DELIVERY LOGIC

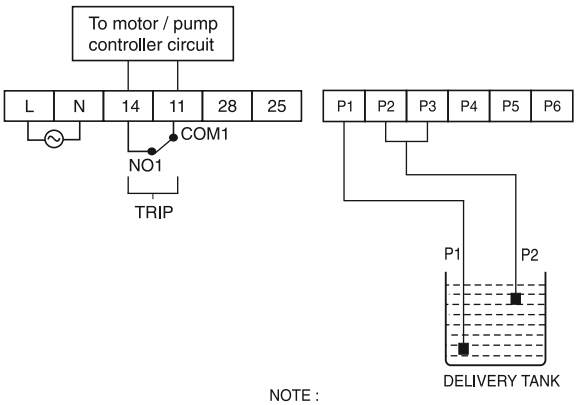

NOTE :
- Sensors P4, P5 & P6 are not connected / kept open.
- Sensor P3 is shorted with sensor P2,to act as single level measurement sensor.

TESTING CHART

Sr. No.	P1	P2= P2+P3	Relay1 Status	Relay2 Status	LED1	LED2	LED3	LED4
					Power ON	Suction	Delivery	Relay
1	IN	OUT	ON	ON	ON	OFF	Fast Blinking	ON
2	IN	IN	OFF	ON	ON	OFF	ON	OFF

SINGLE TANK TWO LEVEL CONTROLLER_DELIVERY LOGIC

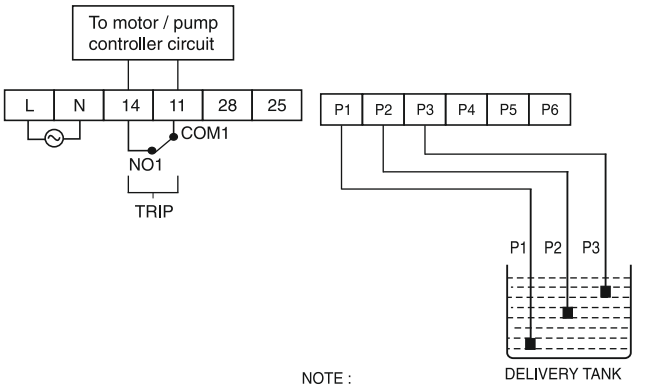

NOTE :
- P4, P5 & P6 are kept open.
- Measurement is done with sensor P2 & P3 for different liquid levels, considering P1 as reference.

TESTING CHART

Sr.No.	P1	SENSOR CONDITION		Relay1 Status	Relay2 Status	LED1	LED2	LED3	LED4
		P2	P3			Power ON	Suction	Delivery	Relay
1	IN	OUT	OUT	ON	ON	ON	OFF	Fast Blinking	ON
2	IN	IN	OUT	ON	ON	ON	OFF	Slow Blinking	ON
3	IN	IN	IN	OFF	ON	ON	OFF	ON	OFF
4	IN	IN	OUT	OFF	ON	ON	OFF	Slow Blinking	OFF
5	IN	OUT	OUT	ON	ON	ON	OFF	Fast Blinking	ON

TWO TANK SINGLE LEVEL

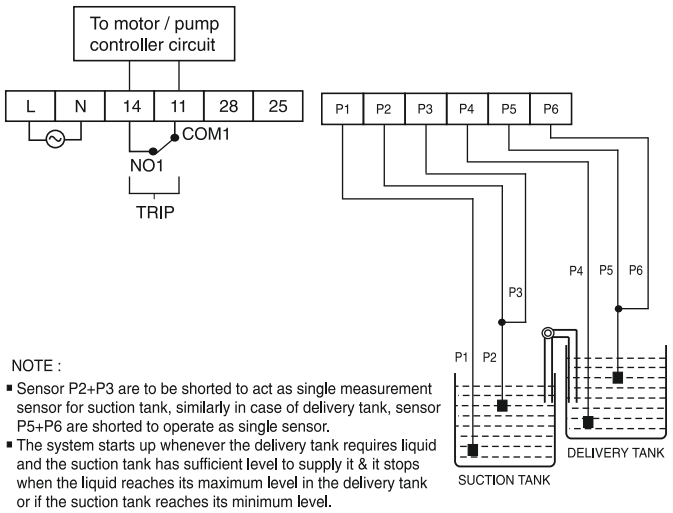

NOTE :
- Sensor P2+P3 are to be shorted to act as single measurement sensor for suction tank, similarly in case of delivery tank, sensor P5+P6 are shorted to operate as single sensor.
- The system starts up whenever the delivery tank requires liquid and the suction tank has sufficient level to supply it & it stops when the liquid reaches its maximum level in the delivery tank or if the suction tank reaches its minimum level.

TESTING CHART

Sr. No.	SENSOR CONDITION				Relay1 Status	Relay2 Status	LED1	LED2	LED3	LED4
	P1 (Ref1)	P2= P2+P3	P4 (Ref2)	P5= P5+P6			Power ON	Suction	Delivery	Relay
1	IN	OUT	IN	OUT	OFF	OFF	ON	Fast Blinking	Fast Blinking	OFF
2	IN	IN	IN	OUT	ON	OFF	ON	ON	Fast Blinking	ON
3	IN	IN	IN	IN	OFF	OFF	ON	ON	ON	OFF
4	IN	OUT	IN	IN	OFF	OFF	ON	Fast Blinking	ON	OFF

SINGLE TANK TWO LEVEL with alarm_DELIVERY LOGIC

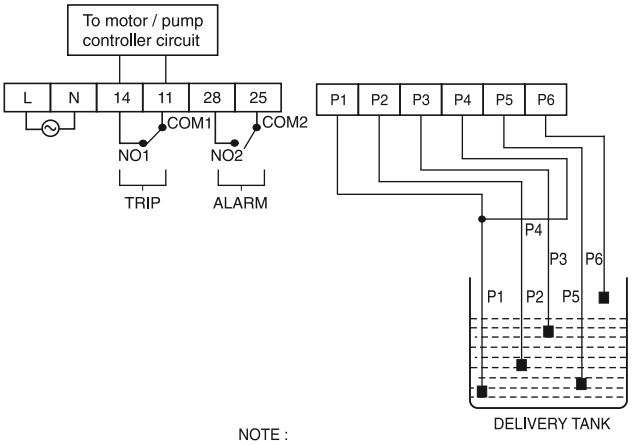

NOTE :
- Sensor P1+P4 are shorted so as to act as single reference.
- Sensor P5 & P6 are considered to indicate alarm condition. Measurement is done with sensor P2 & P3 for different level indication.

TESTING CHART

Sr. No.	P1= P1+P4	SENSOR CONDITION				Relay1 Status	Relay2 Status	LED1	LED2	LED3	LED4
		P2	P3	P5	P6			Power ON	Suction	Delivery	Relay
1	IN	OUT	OUT	OUT	OUT	ON	ON	ON	OFF	Fast Blinking	ON
2	IN	OUT	OUT	IN	OUT	ON	OFF	ON	OFF	Fast Blinking	ON
3	IN	IN	OUT	IN	OUT	ON	OFF	ON	OFF	Slow Blinking	ON
4	IN	IN	IN	IN	OUT	OFF	OFF	ON	OFF	ON	OFF
5	IN	IN	IN	IN	IN	OFF	ON	ON	OFF	ON	OFF
6	IN	IN	IN	IN	OUT	OFF	OFF	ON	OFF	ON	OFF
7	IN	IN	OUT	IN	OUT	OFF	OFF	ON	OFF	Slow Blinking	OFF
8	IN	OUT	OUT	IN	OUT	ON	OFF	ON	OFF	Fast Blinking	ON
9	IN	OUT	OUT	OUT	OUT	ON	ON	ON	OFF	Fast Blinking	ON

TWO TANK TWO LEVEL

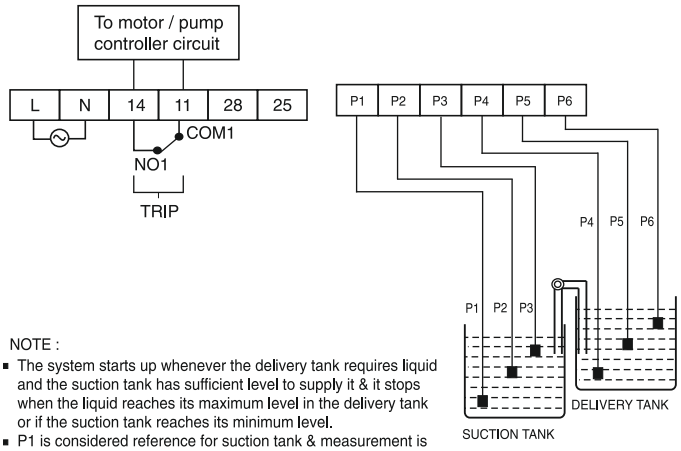

NOTE :

- The system starts up whenever the delivery tank requires liquid and the suction tank has sufficient level to supply it & it stops when the liquid reaches its maximum level in the delivery tank or if the suction tank reaches its minimum level.
- P1 is considered reference for suction tank & measurement is done with sensor P2 & P3 at different liquid levels
  Similarly for delivery tank, P4 is considered as reference & measurement is done with sensor P5 & P6 at different liquid levels.

Sr. No.	SUCTION			DELIVERY			Relay1 Status	Relay2 Status	LED1	LED2	LED3	LED4
	SENSOR CONDITION											
	P1(Ref1)	P2	P3	P4 (Ref2)	P5	P6			Power ON	Suction	Delivery	Relay
1	IN	OUT	OUT	IN	OUT	OUT	OFF	OFF	ON	Fast Blinking	Fast Blinking	OFF
2	IN	IN	OUT	IN	OUT	OUT	OFF	OFF	ON	Slow Blinking	Fast Blinking	OFF
3	IN	IN	IN	IN	OUT	OUT	ON	OFF	ON	ON	Fast Blinking	ON
4	IN	IN	OUT	IN	IN	OUT	ON	OFF	ON	Slow Blinking	Slow Blinking	ON
5	IN	IN	IN	IN	IN	OUT	ON	OFF	ON	ON	Slow Blinking	ON
6	IN	IN	IN	IN	IN	IN	OFF	OFF	ON	ON	ON	OFF
7	IN	IN	OUT	IN	IN	IN	OFF	OFF	ON	Slow Blinking	ON	OFF
8	IN	OUT	OUT	IN	IN	IN	OFF	OFF	ON	Fast Blinking	ON	OFF
9	IN	OUT	OUT	IN	IN	OUT	OFF	OFF	ON	Fast Blinking	Slow Blinking	OFF

Compliance

Applicable EMI / EMC Standards		
Product Standard : IEC 60947-5-1		
Category	**Reference Standards**	**Testing Level**
Radio Frequency Interference Radiation Disturbance Test	IEC 61000-4-20	Class-A
Electrostatic Discharge Immunity Test	IEC 61000-4-2	Class-A
Radio Frequency Interference Conducted Disturbance Test	CISPR 11	Class-A
Immunity To Conducted Disturbances, Introduced By Radio Frequency Fields Test	IEC 61000-4-6	Class-A
Electrical Test Transient / Burst Immunity	IEC 61000-4-4	Class-A
Radiated, Radio-Frquency, Electromagnetic Field Immunity test	IEC 61000-4-8	Class-A
Surge Immunity Test	IEC 61000-4-3	Class-A
Voltage Dips, Short Interruption And Vlotage Variations Immunity Test	IEC 61000-4-5	Class-C
AC Voltage Test	IEC 61000-4-11	Clause 6.7
Temperature Rise Test	IEC 61010-1	Clause 10.1-10.4
Resistance To Heat Test (RTH)	IEC 61010-1	Clause 10.5
Single Fault Test (SFT)	IEC 61010-1	Clause 4.4

Ordering Information

Product Code	Supply Voltage	Certification
WLCA-2M-U-CE	85 to 270V AC / DC	CE