# WLCA-2M-U-CE

# Water Level Controller

DIN 35mm

## Features :

- Pump Protection From Dry Run and Overflow Condition
- Specially Designed Sensors
- Trip Relay & Alarm Relay Indication
- 5A SPST Output Relay (Resistive)
- Manual Start Switch Facility
- Water Levels & Trip Indication LED's
- Used for Two Tank Monitoring, Single Tank Water Level Monitoring
- Selectable Suction and Delivery Mode in Single Tank Operation

### Display Specifications

| | |
|---|---|
| Type | Analog |
| No. of LED | 4 |
| No. of Key | 1 |

### LED Indication Chart

| LED Colour | Notation | Indication |
|---|---|---|
| Green | ON | Power ON |
| Yellow1 | S | Suction Tank Level Indication |
| Yellow2 | D | Delivery Tank Level Indication |
| Red | R | Relay Indication |

### Input Specifications

| | |
|---|---|
| **Functions** | |
| Function | The product operates in following modes<br>1) Single Tank Mode<br>Suction logic : Single level, Two level, With / without alarm<br>Delivery logic : Single level, Two level, With / without alarm<br>2) Dual Tank Mode |
| Input Sensor | Stainless steel prods |
| **Time Setting** | |
| Trip Settings | According to the levels of sensor placed in the water tank |
| Recovery Time | 2sec |
| Reset | Automatic |
| **Accuracy** | |
| Trip Time Delay | 2sec (approx.) |
| Time Accuracy | ±5% of 2 sec |

### Output Specifications

| | |
|---|---|
| Relay Contact | 1 NO (Resistive) |
| Relay Rating | 5A@250VAC / 28VDC |

### Auxiliary Supply Specifications

| | |
|---|---|
| Supply Voltage | 85 to 270V AC / DC |
| Frequency | 50 / 60Hz |
| Power Consumption | 4VA max |

### Environmental Specifications

| | |
|---|---|
| Temperature | Operating Temperature : $0^0$ to $50^0$C<br>Storage Temperature : $-20^0$ to $70^0$C |
| Humidity (non - condensing) | Upto 95% RH |
| Pollution Degree | |
| For PCB | 2 |
| For Product | 3 |
| Degree of Protection Devices | IP20 |

### Mechanical Specifications

| | |
|---|---|
| Mounting | DIN Rail |
| Weight | Sensors : 50gms each<br>Unit : 100gms |
| Screw Tightening Torque | 0.5 NM |

### Dimensions

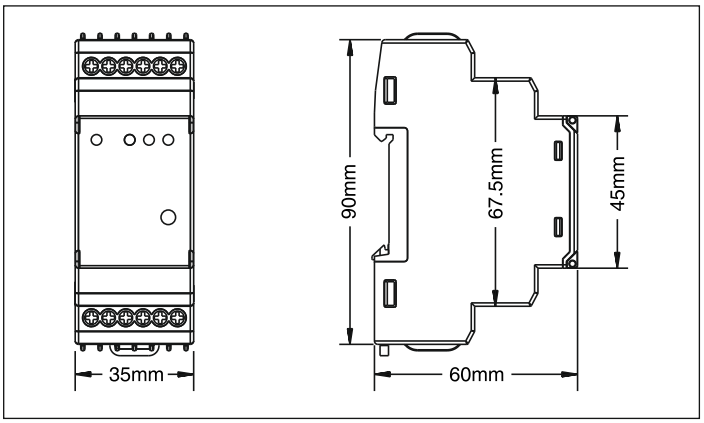


### Terminal Connection

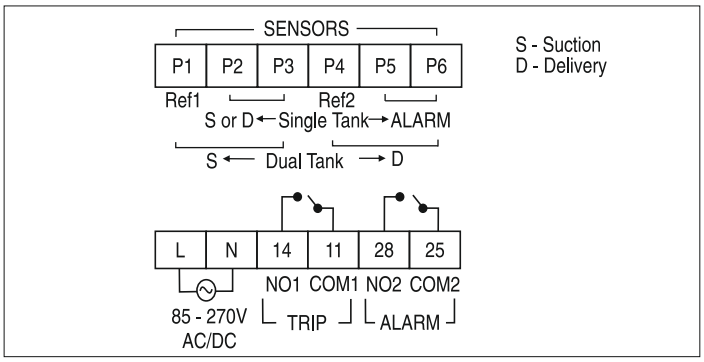

### Input Sensor Dimensions

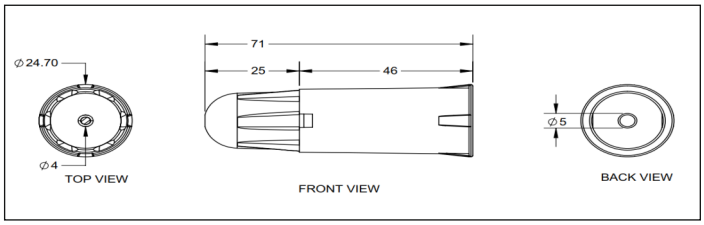


## SINGLE TANK SINGLE LEVEL_SUCTION LOGIC

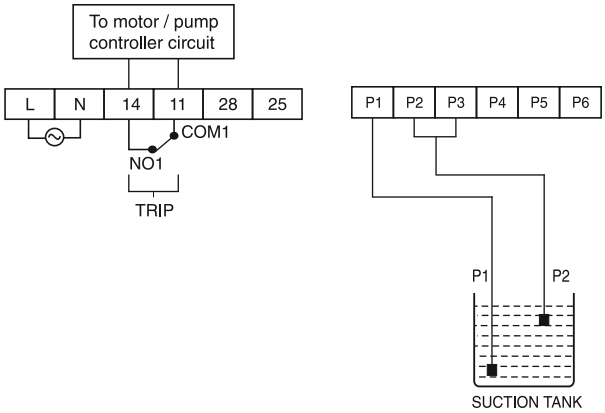


NOTE :
- P4, P5 & P6 are kept open.
- Sensor P3 is shorted with sensor P2, to act as single level measurement sensor.

### TESTING CHART

| Sr. No. | P1 | P2= P2+P3 | Relay1 Status | Relay2 Status | LED1 | LED2 | LED3 | LED4 | Remark |
|---|---|---|---|---|---|---|---|---|---|
| | | | | | Power ON | Suction | Delivery | Relay | |
| 1 | IN | OUT | OFF | ON | ON | Fast Blinking | OFF | OFF | Relay2 will be OFF Continuosly |
| 2 | IN | IN | ON | ON | ON | ON | OFF | ON | |

## SINGLE TANK TWO LEVEL _SUCTION LOGIC

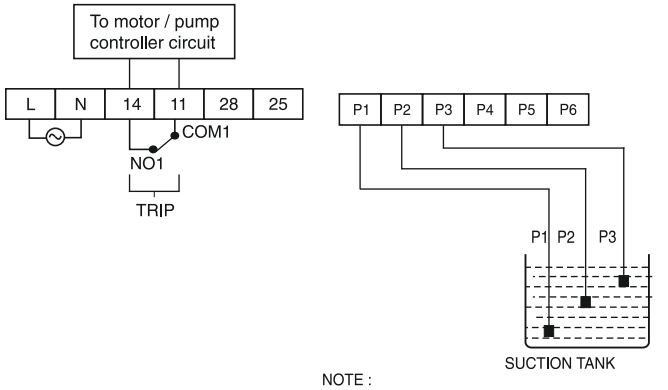


NOTE :
- P4, P5 & P6 are kept open.
- Measurement is done with sensor P2 & P3 for different liquid levels, considering P1 as reference.

### TESTING CHART

| Sr.No. | P1 | SENSOR CONDITION | | Relay1 Status | Relay2 Status | LED1 | LED2 | LED3 | LED4 |
|---|---|---|---|---|---|---|---|---|---|
| | | P2 | P3 | | | Power ON | Suction | Delivery | Relay |
| 1 | IN | OUT | OUT | OFF | ON | ON | Fast Blinking | OFF | OFF |
| 2 | IN | IN | OUT | OFF | ON | ON | Slow Blinking | OFF | OFF |
| 3 | IN | IN | IN | ON | ON | ON | ON | OFF | ON |
| 4 | IN | IN | OUT | ON | ON | ON | Slow Blinking | OFF | ON |
| 5 | IN | OUT | OUT | OFF | ON | ON | Fast Blinking | OFF | OFF |

## SINGLE TANK TWO LEVEL with alarm_SUCTION LOGIC

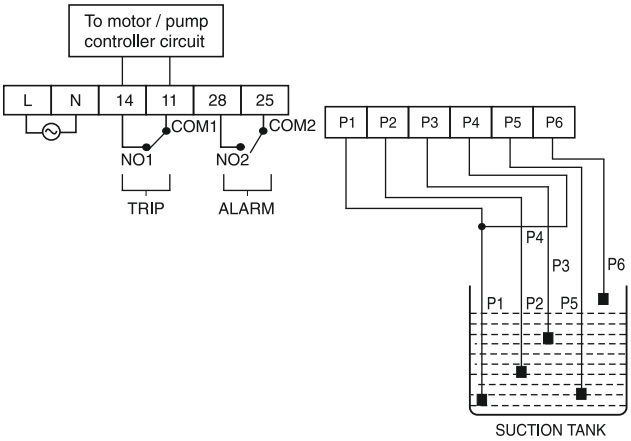


NOTE :
- Sensor P1+P4 are shorted so as to act as single reference.
- Sensor P5 & P6 are considered to indicate alarm condition.
- Measurement is done with sensor P2 & P3 for different level indication.

### TESTING CHART

| Sr.no. | P1= P1+P4 | SENSOR CONDITION | | | | Relay1 Status | Relay2 Status | LED1 | LED2 | LED3 | LED4 |
|---|---|---|---|---|---|---|---|---|---|---|---|
| | | P2 | P3 | P5 | P6 | | | Power ON | Suction | Delivery | Relay |
| 1 | IN | OUT | OUT | OUT | OUT | OFF | ON | ON | Fast Blinking | OFF | OFF |
| 2 | IN | OUT | OUT | IN | OUT | OFF | OFF | ON | Fast Blinking | OFF | OFF |
| 3 | IN | IN | OUT | IN | OUT | OFF | OFF | ON | Slow Blinking | OFF | OFF |
| 4 | IN | IN | IN | IN | OUT | ON | OFF | ON | ON | OFF | ON |
| 5 | IN | IN | IN | IN | IN | ON | ON | ON | ON | OFF | ON |
| 6 | IN | IN | IN | IN | OUT | ON | OFF | ON | ON | OFF | ON |
| 7 | IN | IN | OUT | IN | OUT | ON | OFF | ON | Slow Blinking | OFF | ON |
| 8 | IN | OUT | OUT | IN | OUT | OFF | OFF | ON | Fast Blinking | OFF | OFF |
| 9 | IN | OUT | OUT | OUT | OUT | OFF | ON | ON | Fast Blinking | OFF | OFF |

## SINGLE TANK SINGLE LEVEL_DELIVERY LOGIC

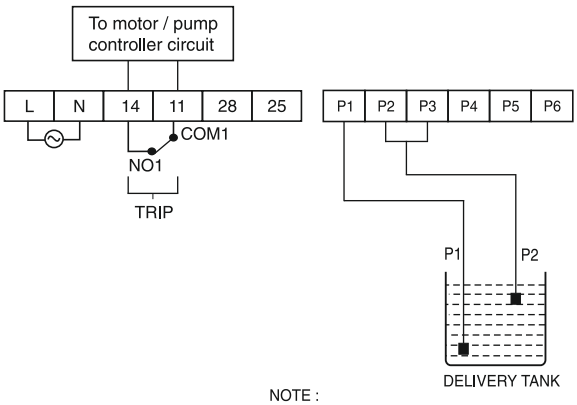


NOTE :
- Sensors P4, P5 & P6 are not connected / kept open.
- Sensor P3 is shorted with sensor P2,to act as single level measurement sensor.

### TESTING CHART

| Sr. No. | P1 | P2= P2+P3 | Relay1 Status | Relay2 Status | LED1 | LED2 | LED3 | LED4 |
|---|---|---|---|---|---|---|---|---|
| | | | | | Power ON | Suction | Delivery | Relay |
| 1 | IN | OUT | ON | ON | ON | OFF | Fast Blinking | ON |
| 2 | IN | IN | OFF | ON | ON | OFF | ON | OFF |

## SINGLE TANK TWO LEVEL CONTROLLER_DELIVERY LOGIC

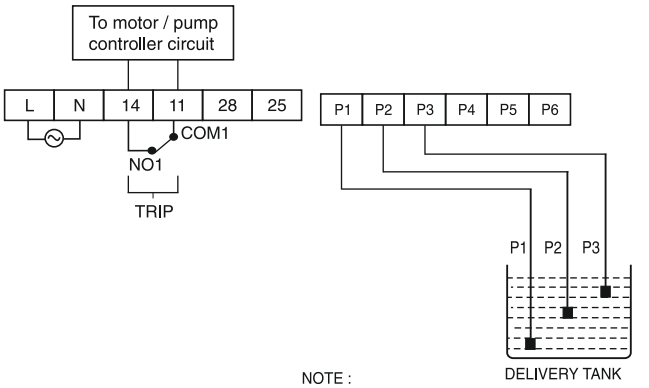


NOTE :
- P4, P5 & P6 are kept open.
- Measurement is done with sensor P2 & P3 for different liquid levels, considering P1 as reference.

### TESTING CHART

| Sr.No. | P1 | SENSOR CONDITION | | Relay1 Status | Relay2 Status | LED1 | LED2 | LED3 | LED4 |
|---|---|---|---|---|---|---|---|---|---|
| | | P2 | P3 | | | Power ON | Suction | Delivery | Relay |
| 1 | IN | OUT | OUT | ON | ON | ON | OFF | Fast Blinking | ON |
| 2 | IN | IN | OUT | ON | ON | ON | OFF | Slow Blinking | ON |
| 3 | IN | IN | IN | OFF | ON | ON | OFF | ON | OFF |
| 4 | IN | IN | OUT | OFF | ON | ON | OFF | Slow Blinking | OFF |
| 5 | IN | OUT | OUT | ON | ON | ON | OFF | Fast Blinking | ON |

## TWO TANK SINGLE LEVEL

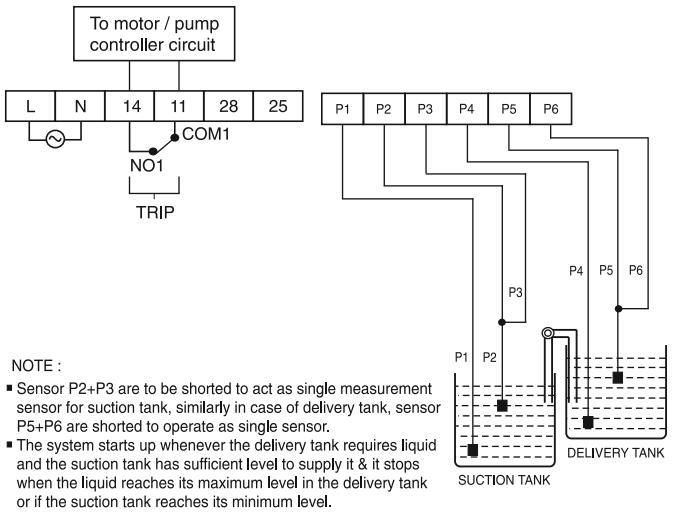


NOTE :
- Sensor P2+P3 are to be shorted to act as single measurement sensor for suction tank, similarly in case of delivery tank, sensor P5+P6 are shorted to operate as single sensor.
- The system starts up whenever the delivery tank requires liquid and the suction tank has sufficient level to supply it & it stops when the liquid reaches its maximum level in the delivery tank or if the suction tank reaches its minimum level.

### TESTING CHART

| Sr. No. | SENSOR CONDITION | | | | Relay1 Status | Relay2 Status | LED1 | LED2 | LED3 | LED4 |
|---|---|---|---|---|---|---|---|---|---|---|
| | P1 (Ref1) | P2= P2+P3 | P4 (Ref2) | P5= P5+P6 | | | Power ON | Suction | Delivery | Relay |
| 1 | IN | OUT | IN | OUT | OFF | OFF | ON | Fast Blinking | Fast Blinking | OFF |
| 2 | IN | IN | IN | OUT | ON | OFF | ON | ON | Fast Blinking | ON |
| 3 | IN | IN | IN | IN | OFF | OFF | ON | ON | ON | OFF |
| 4 | IN | OUT | IN | IN | OFF | OFF | ON | Fast Blinking | ON | OFF |

## SINGLE TANK TWO LEVEL with alarm_DELIVERY LOGIC

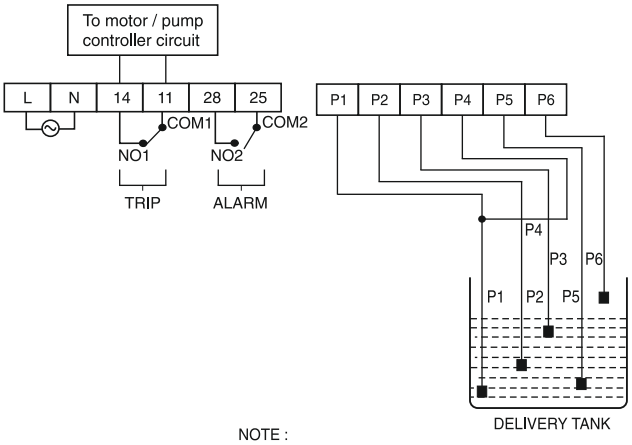


NOTE :
- Sensor P1+P4 are shorted so as to act as single reference.
- Sensor P5 & P6 are considered to indicate alarm condition. Measurement is done with sensor P2 & P3 for different level indication.

### TESTING CHART

| Sr. No. | P1= P1+P4 | SENSOR CONDITION | | | | Relay1 Status | Relay2 Status | LED1 | LED2 | LED3 | LED4 |
|---|---|---|---|---|---|---|---|---|---|---|---|
| | | P2 | P3 | P5 | P6 | | | Power ON | Suction | Delivery | Relay |
| 1 | IN | OUT | OUT | OUT | OUT | ON | ON | ON | OFF | Fast Blinking | ON |
| 2 | IN | OUT | OUT | IN | OUT | ON | OFF | ON | OFF | Fast Blinking | ON |
| 3 | IN | IN | OUT | IN | OUT | ON | OFF | ON | OFF | Slow Blinking | ON |
| 4 | IN | IN | IN | IN | OUT | OFF | OFF | ON | OFF | ON | OFF |
| 5 | IN | IN | IN | IN | IN | OFF | ON | ON | OFF | ON | OFF |
| 6 | IN | IN | IN | IN | OUT | OFF | OFF | ON | OFF | ON | OFF |
| 7 | IN | IN | OUT | IN | OUT | OFF | OFF | ON | OFF | Slow Blinking | OFF |
| 8 | IN | OUT | OUT | IN | OUT | ON | OFF | ON | OFF | Fast Blinking | ON |
| 9 | IN | OUT | OUT | OUT | OUT | ON | ON | ON | OFF | Fast Blinking | ON |

## TWO TANK TWO LEVEL

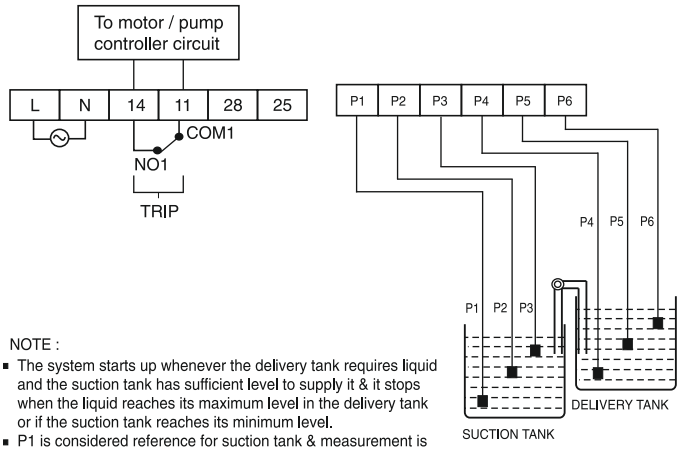


NOTE :

- The system starts up whenever the delivery tank requires liquid and the suction tank has sufficient level to supply it & it stops when the liquid reaches its maximum level in the delivery tank or if the suction tank reaches its minimum level.
- P1 is considered reference for suction tank & measurement is done with sensor P2 & P3 at different liquid levels
  Similarly for delivery tank, P4 is considered as reference & measurement is done with sensor P5 & P6 at different liquid levels.

| Sr. No. | SUCTION | | | DELIVERY | | | Relay1 Status | Relay2 Status | LED1 | LED2 | LED3 | LED4 |
|---|---|---|---|---|---|---|---|---|---|---|---|---|
| | SENSOR CONDITION | | | | | | | | | | | |
| | P1(Ref1) | P2 | P3 | P4 (Ref2) | P5 | P6 | | | Power ON | Suction | Delivery | Relay |
| 1 | IN | OUT | OUT | IN | OUT | OUT | OFF | OFF | ON | Fast Blinking | Fast Blinking | OFF |
| 2 | IN | IN | OUT | IN | OUT | OUT | OFF | OFF | ON | Slow Blinking | Fast Blinking | OFF |
| 3 | IN | IN | IN | IN | OUT | OUT | ON | OFF | ON | ON | Fast Blinking | ON |
| 4 | IN | IN | OUT | IN | IN | OUT | ON | OFF | ON | Slow Blinking | Slow Blinking | ON |
| 5 | IN | IN | IN | IN | IN | OUT | ON | OFF | ON | ON | Slow Blinking | ON |
| 6 | IN | IN | IN | IN | IN | IN | OFF | OFF | ON | ON | ON | OFF |
| 7 | IN | IN | OUT | IN | IN | IN | OFF | OFF | ON | Slow Blinking | ON | OFF |
| 8 | IN | OUT | OUT | IN | IN | IN | OFF | OFF | ON | Fast Blinking | ON | OFF |
| 9 | IN | OUT | OUT | IN | IN | OUT | OFF | OFF | ON | Fast Blinking | Slow Blinking | OFF |

**Compliance**

| Applicable EMI / EMC Standards | | |
|---|---|---|
| Product Standard : IEC 60947-5-1 | | |
| **Category** | **Reference Standards** | **Testing Level** |
| Radio Frequency Interference Radiation Disturbance Test | IEC 61000-4-20 | Class-A |
| Electrostatic Discharge Immunity Test | IEC 61000-4-2 | Class-A |
| Radio Frequency Interference Conducted Disturbance Test | CISPR 11 | Class-A |
| Immunity To Conducted Disturbances, Introduced By Radio Frequency Fields Test | IEC 61000-4-6 | Class-A |
| Electrical Test Transient / Burst Immunity | IEC 61000-4-4 | Class-A |
| Radiated, Radio-Frquency, Electromagnetic Field Immunity test | IEC 61000-4-8 | Class-A |
| Surge Immunity Test | IEC 61000-4-3 | Class-A |
| Voltage Dips, Short Interruption And Vlotage Variations Immunity Test | IEC 61000-4-5 | Class-C |
| AC Voltage Test | IEC 61000-4-11 | Clause 6.7 |
| Temperature Rise Test | IEC 61010-1 | Clause 10.1-10.4 |
| Resistance To Heat Test (RTH) | IEC 61010-1 | Clause 10.5 |
| Single Fault Test (SFT) | IEC 61010-1 | Clause 4.4 |

## Ordering Information

| Product Code | Supply Voltage | Certification |
|---|---|---|
| WLCA-2M-U-CE | 85 to 270V AC / DC | CE |