OPERATING INSTRUCTIONS
800SQ-A

SPECIFICATIONS

SUPPLY	230V AC & 24V AC / DC (50 / 60Hz)
VOLTAGE	-15% to 10% tolerance
DELAY MODES	On delay / Interval
TIME RANGES	3 /10/30/60 sec./ Min
OUTPUT CONTACT	2C/O (5A@250V AC/24V DC) 1 C/O SPDT
ACCURACY	Setting : ±5% of F.S. Repeat : ± 0.5% or 50msec (F.S. = Full Scale)
LED INDICATION	1) Power 'ON'. 2) Relay 'ON'.
RESET	On power interruption Reset time < 100msec
RELAY RATING	5A @ 230V AC / 24V DC resistive.
MECHANICAL ENDURANCE	1 x 10^7 operations
ELECTRICAL ENDURANCE	5 x 10^4 operations (8A 250VAC)
MOUNTING	1) DIN rail mount.
SIZE (in mm)	22.5(W) x 76.85(H) X 100.5(D).
TEMPERATURE	Operating : 0 to 50°C (32 to 122°F) Storage : -20 to 75°C (-4 to 167°F)
HUMIDITY	95% RH.
WEIGHT	84gms

PANEL DIMENSIONS

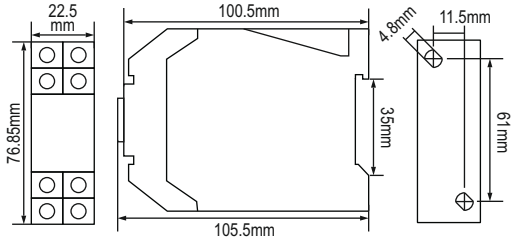

SAFETY SUMMARY

All safety related codification, symbols and instructions that appear in this operating instruction manual must be strictly observed to ensure operator as well as equipment safety. The instruction manual is meant for personnel involved in wiring, installation, operation and routine maintenance of the equipment.

If the equipment related above safety measures are not practiced, the manufacturer does not have any liability for human or equipment safety.

⚠ **CAUTION:** Read complete instructions prior to installation and operation of the unit.

⚠ **CAUTION:** Risk of electric shock.

MAINTENANCE

1. The power supply should be switched off before removing the equipment for cleaning. Ensure that no parts are charged.
2. Clean the equipment with a clean, soft cloth soaked in water. Do not use any other cleaning agent other than the one specified by manufacturer.

INSTALLATION GUIDELINES

⚠ **CAUTION:**

1. The equipment is built-in type with Class II construction and is protected by reinforced insulation. Terminals are a part of the front panel and are protected by means of finger guard. Finger guards are not to be removed during wiring, installation, operation or maintenance.
2. Conductors must not come in contact with the internal circuitry of the equipment as it may lead to a safety hazard.
3. Circuit breaker or main switch should be installed between power source and supply terminals to facilitate power ON/OFF function. This installation must be in a convenient position normally accessible to the operator.

⚠ **CAUTION:**

1. The equipment should not be installed in the environmental conditions other than those mentioned in this manual.
2. Fuse Protection: The equipment does not have a built-in fuse. A fuse of rating 275 VAC/1Amp is recommended.

EMC Installation Guidelines:

1. Use proper input power cables with shortest connections and twisted type.
2. Layout of connecting cables shall be away from any internal emf source.

Mechanical Installation Guidelines:

1. The equipment uses a clamp for T type DIN rail only.
2. Ensure that the rail clamp is correctly fitted.
3. Slide the equipment using appropriate tools and holding the unit from the front side, slide it over the fixed rail.

WIRING GUIDELINES

⚠ **CAUTION:**

1. The power should be turned off while wiring and maintenance to prevent the risk of electric shock. Do not touch the terminals when power is ON.
2. Wiring shall be done strictly according to the terminal layout with shortest connections. Confirm that all the connections are correct.
3. Use lugged terminals to meet M3 screws and ensure that the screws are tightened .

TERMINAL CONNECTIONS

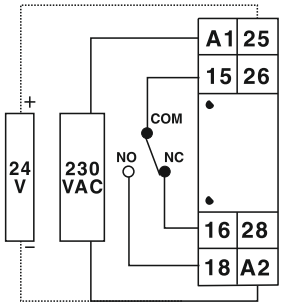

TERMINAL	DESCRIPTION	
A1	L	TIMER SUPPLY
A2	N	TIMER SUPPLY
15	COM	RELAY CONTACT
16	NC	RELAY CONTACT
18	NO	RELAY CONTACT

TYPICAL LOAD CONNECTIONS

1. For load current less than 0.5A

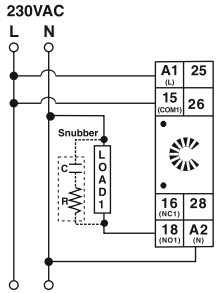

2. For bigger loads, use interposing relay/contactor

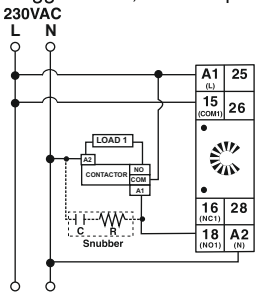

1) Snubber Part No.: APRC - 01.
2) MOV Part No.: AP-MOV - 03.

Note: Use snubber as shown above to increase the life of internal relay.

DIP SWITCH SETTINGS FOR SELECTION OF DELAY MODES

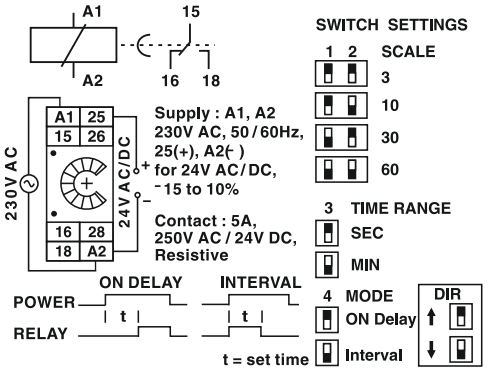

(Specifications subject to change as development is a continuous process)

Selec Controls Pvt. Ltd.
(Formerly Selectron Process Controls Pvt. Ltd.)
Tel:91-22-28476443, Fax:91-22-28471733,
Website: www.selec.com
E- mail: sales@selec.com.

Document name: Operating/0711/800SQ-A/ Version 1 OP