PPRA-4M-3-415V

Pump Protection Relay

DIN 70mm

Features :

- 3Ø - 3 Wire Input
- Monitors Over Load (As per NEMA Curve), Over Current, Dry Run/Under Current, Locked Current, Current Asymmetry
- Phase Sequence, Phase Failure, Over Voltage, Under Voltage, Voltage Asymmetry
- LED Indication : Power ON, Trip Relay
- 4 Knob for Variable Setting
- Test & Reset Function Via Key & Terminal
- Manual, Auto Reset

Display specifications

No of LED	4 1 -Green LED for Power on Indication 1st -Red LED for Current Indication 2nd -Red LED for Voltage Indication 3rd -Red LED for Phase Indication
No of Knobs	4 NEMA -Overload tripping on the basis of the NEMA class selected ΔT - Trip time when fault condition is detected OC - Over Current Trip setting in % of Ir DR - Under Current Trip setting in % of Ir
Keys	2 Key's 1 Test 2 Reset (Press 3 sec to set rated current)

LED Indication Chart

Conditions	Power ON (Green)	Current (1st Red LED)	Voltage (2nd Red LED)	Phase (3rd Red LED)
Healthy	ON	OFF	OFF	OFF
Over Voltage	ON	OFF	Blinking	OFF
Under Voltage	ON	OFF	ON	OFF
Voltage Asymmetry	ON	OFF	ON	Blinking
Voltage Loss	ON	OFF	ON	ON
Over Current	ON	Blinking	OFF	OFF
Under Current	ON	ON	OFF	OFF
Current Asymmetry	ON	ON	OFF	Blinking
Overload	ON	ON	ON	ON
Locked Current	ON	Blinking	OFF	ON
Current Loss	ON	ON	OFF	ON
Phase Reversal	ON	OFF	OFF	ON

Input Specifications

Measuring Range

A) Motor Rated Current Measuring 3A to 80A
- External CT (MPCT) for R, Y, B phase measurement
- (3A - 10A) for 10A CT
- (11A - 40A) for 40A CT
- (24A - 80A) for 80A CT

B) Voltage Measuring Range 280V AC to 500V AC (L - L)

Input Specifications

Time Setting	
Power ON Delay	1sec (Fixed)
Trip Time Delay (Current & Voltage parameters)	0, 2, 4, 6, 8 & 10 sec
Auto Reset (Current & Voltage parameters)	15min
Phase Loss	Instantaneous (<240ms)
Phase Reversal	Instantaneous (<240ms)
Restart Attempt Time Frame	60min (Fixed) for current & voltage parameters
Auto Restart Attempts	3 (fixed)
Hysteresis	
Voltage	Fixed (6V) (Not applicable for current parameters)
Accuracy	
Current Accuracy	±5% of rated current
Voltage Accuracy	±1% of 500V
Time Accuracy	±5% ±100msec
Functional Specification	
Over Load	NEMA class Curve 5, 10, 15, 20, 30
Over Current Ranges	10% - 70% of Ir (Rated Current)
Under Current	20% - 80% of Ir (Rated Current)
Current Asymmetry	Fixed : 50% of Ir (Rated Current)
Locked Current / Stall Current	Fixed : 300% of Ir (Rated Current)
Over Voltage	Fixed (480V)
Under Voltage	Fixed (350V)

Output Specifications

Control Output	1 C/O (SPDT)
Relay Rating	NO 5A@250V AC / 28VDC NC 3A@250V AC / 28VDC

Auxiliary Supply Specifications

Operating Voltage Range	280 - 500V AC (L - L)
Power Consumption	40VA
Frequency	50 - 60Hz

Environmental Specifications

Temperature	Operating Temperature : 0°C to 55°C Storage Temperature : -20°C to +70°C
Humidity (non Condensing)	Up to 95% RH

Mechanical Specifications

Mounting	DIN Rail Mount
Wire Size (max)	4 sq.mm
Size	71.2 x 70 x 90 (H x W x L)
Screw tightening torque	0.5 N-M
Weight	220gms approx

Dimensions (All are in mm)

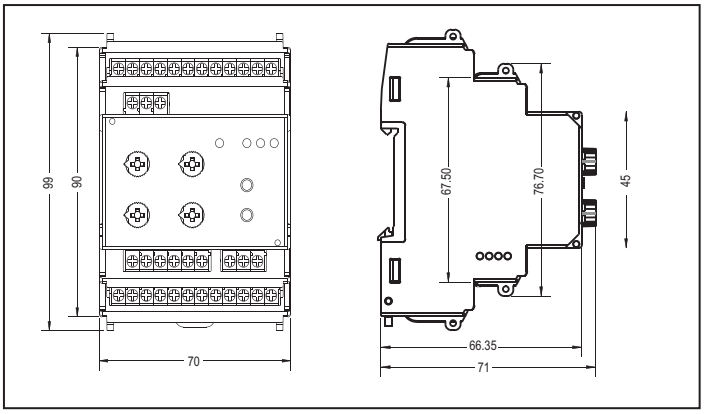

Terminal Connections

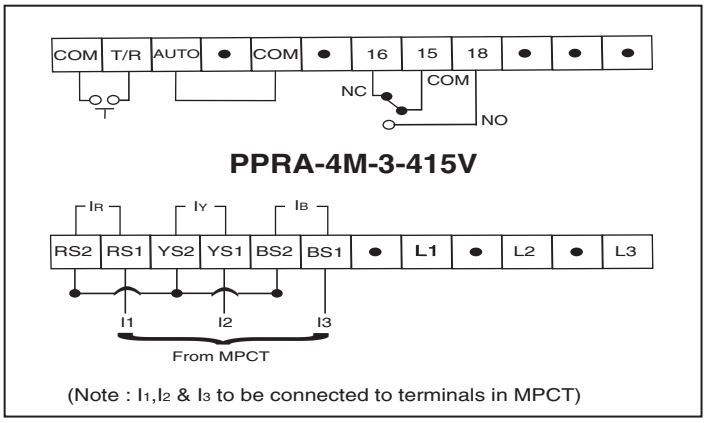

CT Dimensions

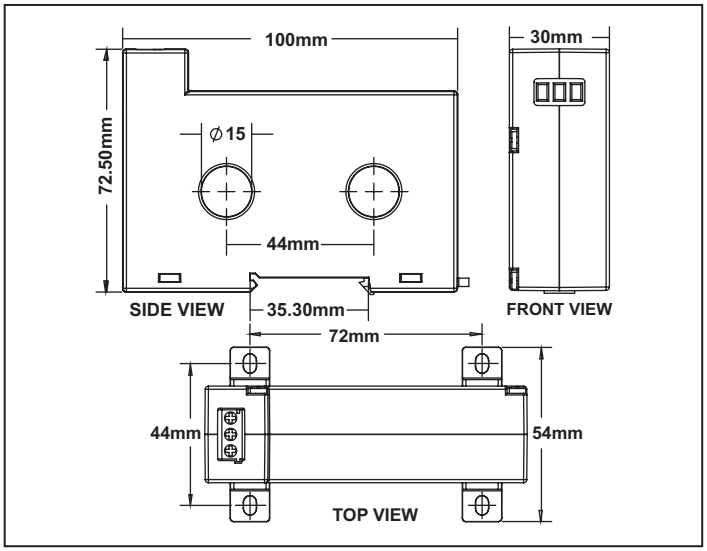

Connection Diagram

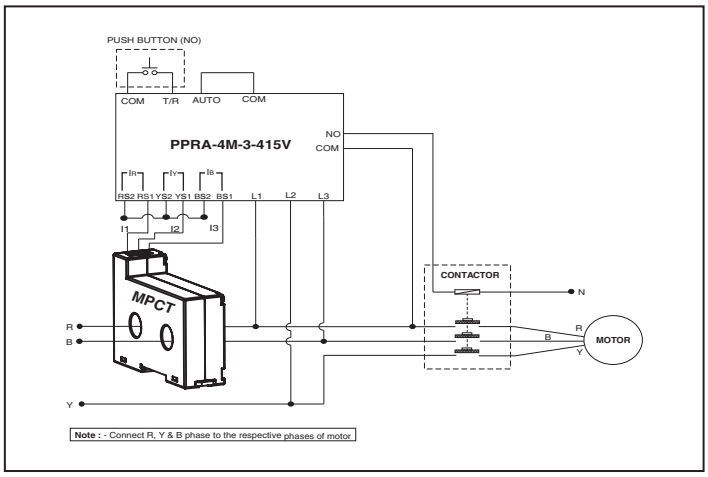

Ordering Information

Product Code	Supply Voltage	Certification
PPRA-4M-3-415V	415V	---

Accesories

Product Code	Input Current	Certification
MPCT D15 10 A	10 A	---
MPCT D15 40 A	40 A	---
MPCT D15 80 A	80 A	---