OP294-V05

selec

TC544A / TC244AX / TC344AX / DTC204A-2 / DTC324A-2

Operating Instructions

SPECIFICATIONS

Display
4 + 4 digit, 7 segment digital display
4 digit for DTC204A-2 / DTC324A-2

LED Indications
1 : Output 1 ON
2 : Output 2 ON
T : Auto tune
S : Dwell timer* (Applicable for TCX44A/AX)

Keys
3 keys for digital setting

INPUT SPECIFICATIONS

Input Signal
Thermocouple (J,K,T,R,S) / RTD (Pt100)

Sampling time
250 ms

Input Filter (FTC)
0.2 to 10.0 sec

Resolution
0.1/1° for TC/RTD input (Fixed 1° for R & S type TC input)

Temperature Unit
°C / °F selectable

Indication Accuracy
For TC inputs : 0.25% of F.S ±1°
For R & S inputs : 0.5% of F.S ± 2°
(20 min of warm up time for TC input)
For RTD inputs : 0.1% of F.S ±1°
(F.S = Full Scale)

FUNCTIONAL SPECIFICATIONS

Control Method
1) PID control with auto tuning
2) ON-OFF control
3) Heat-Cool (with auto-tuning)

Proportional Band (P)
1.0 to 400.0°

Integral Time (I)
0 to 9999 sec

Derivative Time (D)
0 to 9999 sec

Cycle Time
0.1 to 99.9 sec

Hysteresis Width
0.1 to 99.9°

Dwell Timer
0 to 9999 min (only for TCX44A/AX)

Manual Reset Value
-19.9 to 19.9°

HEAT COOL PID

Control Method
PID

Proportional Band-Cool
0.0 to 400.0°

Cycle Time-Cool
0.1 to 99.9 sec.

Dead Band
SPLL to SPHL (Programmable)

OUTPUT

Control Output (Relay or SSR user selectable) :
Relay Contact (SPDT)
05 A resistive @ 250V AC / 30V DC (TC544A : SPST RLY)
10 A resistive* @ 250V AC / 30V DC
(*For DTC204A-2 / DTC324A-2)
SSR Drive Output (Voltage Pulse)
12V DC, 50 mA

Auxiliary Output :
Relay Contact (SPDT)
05 A resistive @ 250V AC / 30V DC(TC544A : SPST RLY)
SSR Drive Output (Voltage Pulse)
12V DC, 50 mA

POWER SUPPLY

Supply Voltage
85 to 270V AC/DC (AC : 50 or 60 Hz)
Optional - 24V AC/DC

Power Consumption
6 VA max @ 230V AC

Temperature
Operating : 0 to 50°C
Storage : -20 to 75°C

Humidity (non-condensing)
95% RH

Weight
TC544A : 142 gms
TC244AX / DTC204A-2 : 200 gms
TC344AX / DTC324A-2 : 252 gms

SAFETY PRECAUTIONS

All safety related codifications, symbols and instructions that appear in this operating manual or on the equipment must be strictly followed to ensure the safety of the operating personnel as well as the instrument.

If the equipment is not handled in a manner specified by the manufacturer it might impair the protection provided by the equipment.

Read complete instructions prior to installation and operation of the unit.

WARNING : Risk of electric shock.

WIRING GUIDELINES

WARNING :

1. To prevent the risk of electric shock power supply to the equipment must be kept OFF while doing the wiring arrangement. Do not touch the terminals while power is being supplied.
2. To eliminate electromagnetic interference use short wire with adequate ratings; twists of the same in equal size shall be made. For the input and output signal lines, be sure to use shielded wires and keep them away from each other.
3. Cable used for connection to power source, must have a cross section of $1mm^2$ or greater. These wires shall have insulation capacity made of at least 1.5kV.
4. When extending the thermocouple lead wires, always use thermocouple compensation wires for wiring. For the RTD type, use a wiring material with a small lead resistance (5Ω max per line) and no resistance differentials among three wires.
5. A better anti-noise effect can be expected by using standard power supply cable for the instrument.

MAINTENANCE

1. The equipment should be cleaned regularly to avoid blockage of ventilating parts.
2. Clean the equipment with a clean soft cloth. Do not use Isopropyl alcohol or any other cleaning agent.

INSTALLATION GUIDELINES

1. This equipment, being built-in-type, normally becomes a part of main control panel and in such case the terminals do not remain accessible to the end user after installation and Internal wiring.
2. Do not allow pieces of metal, wire clippings, or fine metallic fillings from installation to enter the product or else it may lead to a safety hazard that may in turn endanger life or cause electrical shock to the operator.
3. Circuit breaker or mains switch must be installed between power source and supply terminals to facilitate power 'ON' or 'OFF' function. However this switch or breaker must be installed in a convenient position normally accessible to the operator.
4. Use and store the temperature controller within the specified ambient temperature and humidity ranges as mentioned in this manual.

CAUTION

1. When powering up for the first time, disconnect the output connections.
2. Fuse Protection : The unit is normally supplied without a power switch and fuses. Make wiring so that the fuse is placed between the mains power supply switch and the controller. (2 pole breaker fuse - rating : 275V AC,1A for electrical circuitry is highly recommended)
3. Since this is a built-in-type equipment (finds place in main control panel), its output terminals get connected to host equipment. Such equipment shall also comply with basic EMI/EMC and other safety requirements like BSEN61326-1 and BSEN 61010 respectively.
4. Thermal dissipation of equipment is met through ventilation holes provided on chassis of equipment. Such ventilation holes shall not be obstructed else it can lead to a safety hazard.
5. The output terminals shall be strictly loaded to the manufacturer specified values / range.

MECHANICAL INSTALLATION

NEW **Outline Dimensions** | **Panel Cutout**

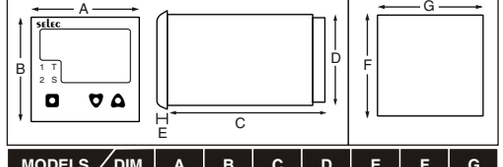

MODELS / DIM	A	B	C	D	E	F	G
TC544A	52	52	94	45	4	46	46
TC244AX / DTC204A-2	72	72	83.7	67	4.5	69	69
TC344AX / DTC324A-2	96	96	73	90.5	5	92	92

1. Prepare the panel cutout with proper dimensions as shown above.
2. Fit the unit into the panel with the help of clamp given.
3. The equipment in its installed state must not come in close proximity to any heating sources, caustic vapors, oils, steam, or other unwanted process by-products.
4. Use the specified size of crimp terminals (M3.5 screws) to wire the terminal block. Tighten the screws on the terminal block using the tightening torque within the range of 1.2 N.m.
5. Do not connect anything to unused terminals.

EMC GUIDELINES

1. Use proper input power cables with shortest connections and twisted type.
2. Layout of connecting cables shall be away from any internal EMI source.

LOAD CONNECTIONS

1. The service life of the output relays depends on the switching capacity and switching conditions. Consider the actual application conditions and use the product within the rated load and electrical service life.
2. Although the relay output is rated at 5/10 amps it is always necessary to use an interposing relay or contactor that will switch the load. This avoids damage to the controller in the event of a fault short developing on the power output circuit.
3. Always use a separate fused supply for the "power load circuit"and do not take this from the live and neutral terminals supplying power to the controller.

For load current less than 0.5A

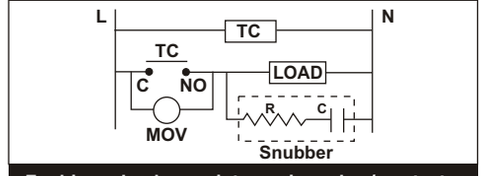

For bigger loads, use interposing relay / contactor

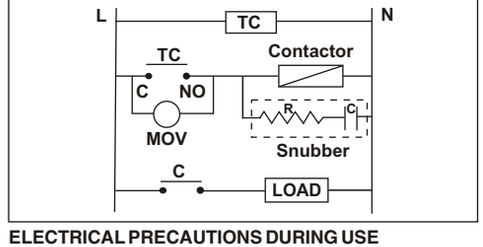

ELECTRICAL PRECAUTIONS DURING USE

Electrical noise generated by switching of inductive loads can create momentary disruption, erratic display, latch up, data loss or permanent damage to the instrument.

To reduce noise:

a) Use of snubber circuits across loads as shown above, is recommended.
b) Use separate shielded wires for inputs.

TERMINAL CONNECTIONS

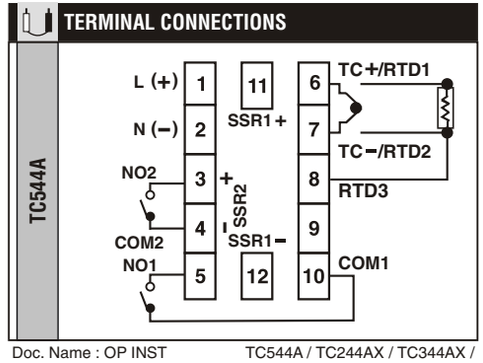

TERMINAL CONNECTIONS

TC244AX / DTC204A-2

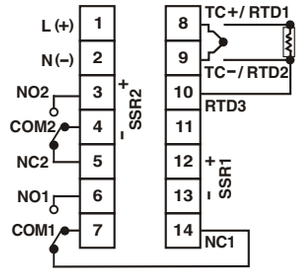

* SSR2 Not applicable for DTC204A-2

TC344AX / DTC324A-2

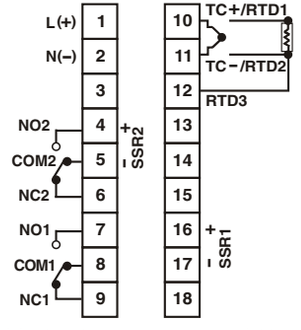

* SSR2 Not applicable for DTC324A-2

Use only the correct thermocouple wire or compensating cable from the probe to instrument terminals avoiding joints in the cable if possible. Failure to use the correct wire type will lead to inaccurate readings.
Ensure that the input sensor connected at the terminals and the input type set in the temperature controller configuration are the same.

FRONT PANEL DESCRIPTION

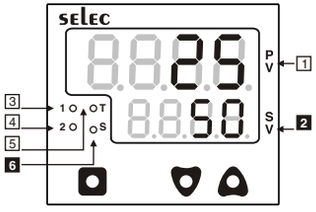

1 Process-value (PV) / Parameter name display	1) Displays a process value (PV). 2) Displays the parameter symbols at configuration mode/online menu. 3) Displays PV error conditions. (refer Table 2 on page 2)
2 Parameter setting display	1) Displays the parameter settings at configuration mode/online menu. (Not applicable for DTC204A-2 / DTC324A-2)
3 Control output 1 indication	The LED is lit when the control output 1 is ON
4 Control output 2 indication	The LED is lit when the control output 2 is ON
5 Tune	Auto tune : Blinking
6 Dwell timer	Blinking : Dwell timer is in progress. Continuous ON : Time over. (Not applicable for DTC204A-2 / DTC324A-2)

FRONT KEYS DESCRIPTION

FUNCTIONS	KEY PRESS
ONLINE	
To view Level 1	Press key for 3 sec.
To view Level 2	Press key for 3 sec.
To view Protection Level	Press + keys for 3 sec.
TCX44A/AX To view online parameters	Lower display selectable between SET1/SET2/TIME using key.
NOTE : Elapsed time / Remaining time dependent on the selection of ONL parameter in level1. (Not applicable for DTC204A-2 / DTC324A-2)	
DTC204A-2 / DTC324A-2 To view online parameters	Display selectable between SET 1/ SET 2 using key. **Note :** Display shows parameter SET 1 / SET 2 for 1 sec.
To change online parameter values	Press + / to change parameter value.
PROGRAMMING MODE	
To view parameters on the same level.	or key once to view the next or previous function in operational menu.
To increase or decrease the value of a particular parameter.	+ to increase and + to decrease the function value. **Note :** Parameter value will not alter when respective level is locked.
NOTE : The unit will auto exit programming mode after 30 sec. of inactivity. **OR** By pressing the or or + keys for 3 sec.	

INPUT RANGES (Table 1)

FOR RTD

INPUT		RANGES	
Resolution		1	0.1
Pt100	°C	-150 to 850	-150 to 850
	°F	-238 to 1562	-199 to 999

FOR THERMOCOUPLE

INPUT		RANGES	
Resolution		1	0.1
J	°C	-199 to 750	-199 to 750
	°F	-328 to 1382	-199 to 999
K	°C	-199 to 1350	-199 to 999
	°F	-328 to 2462	-199 to 999
T	°C	-199 to 400	-199 to 400
	°F	-328 to 750	-199 to 750
R & S	°C	0 to 1750	N/A
	°F	32 to 3182	N/A

ERROR DISPLAY (Table 2)

When an error has occured, the upper display indicates error codes as given below.

Error	Meaning	Control Output Status
S.br	Sensor break / over range condition	OFF
S.rE	Sensor reverse / under range condition	OFF

TCX44A/AX

Programming online parameters

Setpoint 1 — **Default : 50**

Range : SPLL to SPHL

If upper display is selected as SEt1 then,
Pressing key will show on Upper display : SEt1
Lower display : <50>
Press + / keys to increment / decrement SEt1 value.

Setpoint 2 / Dead band — **Default : 0**

Range : SPLL to SPHL

If upper display is selected as SEt2/db then,
Pressing key will show on Upper display: SEt2/db
Lower display: <0>
Press + / keys to increment / decrement SEt2 /db value.

Dwell Timer — **Default : OFF**

Range : OFF, 1 to 9999 min

If upper display is selected as t.rEm/t.ELP then,
Pressing key will show on Upper display : tIme
Lower display : <OFF>
Press + / keys to increment / decrement dwEL time value.

DTC204A-2 / DTC324A-2

Programming online parameters

Setpoint 1 — **Default : 50**

Range : SPLL to SPHL

If online parameter is selected as SEt1 then,
Pressing key will show on display : SEt1 & then <50>
Press + / keys to increment / decrement SEt1 value.

Setpoint 2 / Dead band — **Default : 0**

Range : SPLL to SPHL

If upper display is selected as SEt2/db then,
Pressing key will show on display : SEt2 /db & then <0>
Press + / keys to increment / decrement SEt2/db value.

CALIBRATION CERTIFICATE

Date :

Model No :

Claimed Accuracy :
For TC inputs : 0.25% of FS ±1°
For R & S inputs : 0.5% of F.S ± 2°
(20 min of warm up time for TC input)
For RTD inputs : 0.1% of FS ±1°

Sources calibrated against :

Multimeter calibration report no :

The calibration of this unit has been verified at the following values :

SENSOR	CALIBRATION TEMP (°C)	DISPLAY VALUE (°C)
J	35.0	35.0
	300.0	300.0
	600.0	600.0
K	35.0	35.0
	700.0	700.0
	1350	1350
PT100	0.0	0.0
	400.0	400.0
	800.0	800.0

The thermocouple / RTD curves are linearised in this microprocessor based product; and hence the values interpolated between the readings shown above are also equally accurate; at every point in the curve.

Unit is accepted as accuracy is within the specified limit of claimed accuracy and certificate is valid upto one year from the date of issue.

CHECKED BY :

CONFIGURATION INSTRUCTIONS

KEY FUNCTIONS

- ▲ → Press once to view online parameters | Press for 3 sec to enter Level 2 | Press once to view next parameter in configuration menu
- ▼ → Press for 3 sec to enter Level 1 | Press once to view previous parameter in configuration menu | ▲+▼ → Press for 3 sec to enter protection Level
- ■+▲ or ■+▼ → Allows the user to increase or decrease associated parameter value | ▲ or ▼ or ▲+▼ → To exit configuration menu press any of these keys for 3 sec

OPERATIONAL MENU

POWER ON

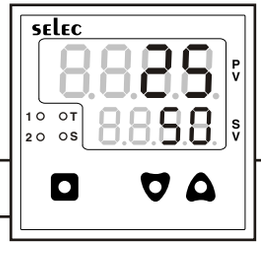

Note : At power ON lower display shows (momentary) input type selected in Level 1.
*Lower display not applicable for DTC204A-2/DTC324A-2

Press ▼ key for 3sec.

Press ▲ key for 3sec.

Press ▲+▼ keys for 3sec.

Level 1

Display	Description	Default Value	Range	Display Condition
INPt	Input type (Refer Table 1)	J	J/K/T/R/S/RTD	—
RESL	Display Resolution	1	1/0.1	Not prompted for R & S type
UNIt	Temperature unit	°C	°C/°F	—
SPLL	Set point low limit	-199	Min range of sensor selected to SPHL	—
SPHL	Set point high limit	750	SPLL to Max range of sensor selected	—
FtC	Filter time constant	1.0	0.2 to10.0 sec	—
ACt1	Control action for relay 1	RE	RE/FD	Not prompted for HC=YES
**CNtL	Control logic	PId / ONF	PID/ONF	—
OUt	Control Output selection	RLY	RELAY/SSR	—
*dYEL	Dwell mode enable	NO	NO/YES	—
HC	Heat-cool mode selection	NO	NO/YES	—
ACt2	Control action for relay 2	RE	RE/FD/TIME*	When HC=NO. TIME prompted when DWEL =YES
rOd2	Relay 2 type	dEV	DEV/ABS	When ACT2=RE/FD
*ONL	Online menu for timer	REMN	REMN/ELPS	When DWEL =YES
ARY	Anti-reset windup %	25.0	1.0 to 100.0%	When CNTL =PID
rSt	Factory default (Reset all)	NO	NO/YES	—

Level 2

Display	Description	Default Value	Range	Display Condition
tUNE	Tune	OFF	OFF/ON	For CNTL=PID
P	Proportional band	10	1.0 to 400.0°	For CNTL=PID
I	Integral time	120	0 to 9999 sec	For CNTL=PID
d	Derivative time	30	0 to 9999 sec	For CNTL=PID
CYC.A	Cycle time mode	AUtO	AUTO/USR.F	For CNTL=PID
CYC.t	Cycle time	15.0	0.1 to 99.9 sec	For CNTL=PID
HYS1	Hysteresis 1	1.0	0.1 to 99.9°	For CNTL=ONF
rMLP	Manual reset	0.0	-19.9 to +19.9°	For CNTL=PID & I=0
Pb.C	Proportional band-cool	10	1.0 to 400.0°	For CNTL=PID & HC=YES
CYt.C	Cycle time-cool	15.0	0.1 to 99.9 sec	For CNTL=PID & HC=YES
HYS2	Hysteresis 2	1.0	0.1 to 99.9°	For HC=NO or HC=YES & CNTL=ONF
*tIME	Dwell time	OFF	OFF, 1 to 9999 min	When DWEL =YES
dSP.b	Display bias	0.0	-19.9 to 19.9°	—

* Parameter marked not applicable for DTC204A-2 & DTC324A-2
** Default value of CNtL = ONF for DTC204A-2 & DTC324A-2

Protection Level

Display	Description	Default Value	Range	Display Condition
SP1	Lock setpoint 1	UNLY	UNLK/LOCK	—
SP2	Lock setpoint 2	UNLY	UNLK/LOCK	—
LUL1	Lock level 1	UNLY	UNLK/LOCK	—
LUL2	Lock level 2	UNLY	UNLK/LOCK	—
*dYEL	Lock dwell time	UNLY	UNLK/LOCK	Prompted when DWEL=YES

Note

1. Locking parameters (LVL1 or LVL2 or SP or DWEL) will not permit change in the value of respective level parameters.
   Time value (online) can be altered only when DWEL is not locked in protection level.
2. Continuous operation of ■+▲/▼ keys for SP or other parameters makes update speed faster in 3 stages after 3 sec.

(Specifications are subject to change, since development is a continuous process)

Selec Controls Pvt. Ltd.
Tel. No. : +91-22-40394200 / 40394202
Fax No. : +91-22-28471733 Toll free : 1800 227 353
Website: www.selec.com Email: sales@selec.com