# TWIX-3-24VDC

# Compact PLC

Size: 48 x 96 mm

## Features :

- **Compact PLC with Built-in HMI**
- **Configurable LED Display**
- **Windows Based User Friendly Software for Ladder Programming & HMI Configuration**
- **RS485 Based Communication with MODBUS Protocol**

### Display Specifications

| | |
|---|---|
| Display | 7 Segment LED |
| Digits | (4 + 4 RED) + 6 GREEN Digits |
| LED bank | 4 RED LED's, 4 GREEN LED's |
| No. of Keys | 5 keys (4 User Configurable) |

### Input Specifications

| | |
|---|---|
| **Digital Input** | |
| No. of Digital Inputs | 8 |
| Input Type | PNP |
| Input Voltage Range | 5 - 30V DC |
| Response Time | Typical 2 mSec (Based on Ladder Scan Time)<br>100 µSec for Fast Input |
| Debounce Time | 0 to 255 mSec (Default 10 mSecs) |
| Timer Accuracy | 0.1% or 2ms (Whichever is greater) |
| **Fast Counter Input** | |
| Input Type | PNP |
| No. of fast Input channels | 1 |
| Max Speed | 5 kHz |
| **Analog Input** | |
| No. of channels | 1 |
| Sensor Type | TC / RTD |
| Sensor | J, K, T, R, S, C, E, B, N, L, U, W, PLTNL,<br>mV (-5 to 65mV), Pt100 |
| Accuracy | 0.25% ± 1°C (TC), 0.1% ±1°C (RTD) at 25C |
| Conversion time | 50 mSec |
| Resolution | 14 Bits |
| Input Impedance | 560k for TC<br>750kΩ for RTD |
| Maximum Non destructive Input | 5V |

### Communication

| | |
|---|---|
| Communication Port | RS485 Port [Slave] |
| Communication Protocol | MODBUS RTU |
| Connector | RJ25,6 pin Jack |

### Output Specifications

| | |
|---|---|
| **Digital Output - Transistor** | |
| No. of Digital Outputs | 6 |
| Output Type | Source 100mA each @ 24V DC |
| Response Time | 10 ms |
| Short Circuit Protection | Yes |
| Isolation between CPU & Output | No |
| Isolation between Outputs | No |
| Nominal Load | 240 E |
| Breaking Current | 110mA |

### Functional Specifications

| | |
|---|---|
| Programming Method | Windows based software for ladder programming and HMI configuration. |
| Memory | Data memory : 16 kB<br>Code memory : 112 kB<br>EEPROM Memory : 1 kB |
| Max. no. of Objects | 2000 (As per memory) |
| Minimum Scan Time | 200 µSec |
| Typical Scan Time | 2 mSec (Based on ladder scan time) |

### Environmental Specifications

| | |
|---|---|
| Operating Temperature | 0 to 55°C |
| Storage Temperature | -20 to 70°C |
| Humidity (non-condensing) | 10% to 95% RH |

### Mechanical Specifications

| | |
|---|---|
| Mounting | Panel |
| Weight | 240 gms approx |

### Functional Features

| | |
|---|---|
| Timer Operational Modes | On Delay, Off Delay, Pulse,<br>Special [Up/Down] Timer, 1ms Timer |
| Timer Resolution | 1 mSec (Accurate only for 1 mSec Timer block) |
| Counter | Up Counter, Down Counter,<br>Up/Down Counter, Special [Up/Down] Counter |
| Other Blocks | Analog Input, FTC, PIDT, Rampsoak |
| Memory Retention | 10 years (2KB) |

### Supply Specification

| | |
|---|---|
| Supply Voltage | 18 to 30V DC |
| Power Consumption | 6W Max |

**Dimensions** (in mm)

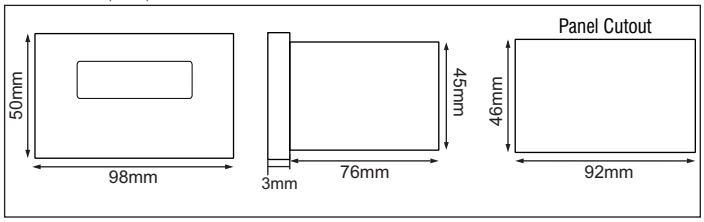


**Terminal Connections**

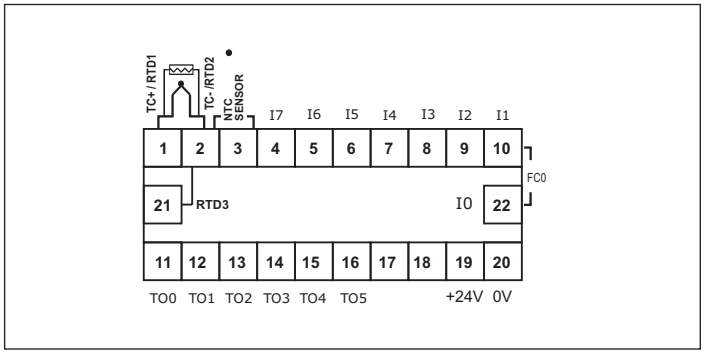


| | |
|---|---|
| RS485 for downloading and networking | 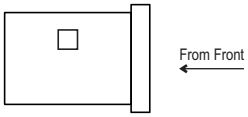 |
| RS485 on side terminal (Communication port 1) | |



**Port Description**

| Port 1 (6 Pin Jack) | |
|---|---|
| **Pin** | **Description** |
| 1 | RS485 + ve |
| 2 | NC |
| 3 | NC |
| 4 | NC |
| 5 | NC |
| 6 | RS485 - ve |

## Ordering Information

| Product Code | Description | Certification |
|---|---|---|
| **TWIX-3-24VDC** | PLC – 8DI, 6DO, 1AI (TC/RTD) & 24VDC | CE **RoHS** in Process |

**Accessories** (To be ordered separately)

| | |
|---|---|
| Downloading Cable | AC-USB-RS485-03 |
| Networking | ACH-004 (RJ25 Cable)<br>AC-IOEXP-03 (Expansion Adapter)<br>AC-USB-RS485-02 (USB to RS485 Cable) |