TWIX-3-24VDC

Compact PLC

Size: 48 x 96 mm

Features :

- **Compact PLC with Built-in HMI**
- **Configurable LED Display**
- **Windows Based User Friendly Software for Ladder Programming & HMI Configuration**
- **RS485 Based Communication with MODBUS Protocol**

Display Specifications

Display	7 Segment LED
Digits	(4 + 4 RED) + 6 GREEN Digits
LED bank	4 RED LED's, 4 GREEN LED's
No. of Keys	5 keys (4 User Configurable)

Input Specifications

Digital Input	
No. of Digital Inputs	8
Input Type	PNP
Input Voltage Range	5 - 30V DC
Response Time	Typical 2 mSec (Based on Ladder Scan Time) 100 µSec for Fast Input
Debounce Time	0 to 255 mSec (Default 10 mSecs)
Timer Accuracy	0.1% or 2ms (Whichever is greater)
Fast Counter Input	
Input Type	PNP
No. of fast Input channels	1
Max Speed	5 kHz
Analog Input	
No. of channels	1
Sensor Type	TC / RTD
Sensor	J, K, T, R, S, C, E, B, N, L, U, W, PLTNL, mV (-5 to 65mV), Pt100
Accuracy	0.25% ± 1°C (TC), 0.1% ±1°C (RTD) at 25C
Conversion time	50 mSec
Resolution	14 Bits
Input Impedance	560k for TC 750kΩ for RTD
Maximum Non destructive Input	5V

Communication

Communication Port	RS485 Port [Slave]
Communication Protocol	MODBUS RTU
Connector	RJ25,6 pin Jack

Output Specifications

Digital Output - Transistor	
No. of Digital Outputs	6
Output Type	Source 100mA each @ 24V DC
Response Time	10 ms
Short Circuit Protection	Yes
Isolation between CPU & Output	No
Isolation between Outputs	No
Nominal Load	240 E
Breaking Current	110mA

Functional Specifications

Programming Method	Windows based software for ladder programming and HMI configuration.
Memory	Data memory : 16 kB Code memory : 112 kB EEPROM Memory : 1 kB
Max. no. of Objects	2000 (As per memory)
Minimum Scan Time	200 µSec
Typical Scan Time	2 mSec (Based on ladder scan time)

Environmental Specifications

Operating Temperature	0 to 55°C
Storage Temperature	-20 to 70°C
Humidity (non-condensing)	10% to 95% RH

Mechanical Specifications

Mounting	Panel
Weight	240 gms approx

Functional Features

Timer Operational Modes	On Delay, Off Delay, Pulse, Special [Up/Down] Timer, 1ms Timer
Timer Resolution	1 mSec (Accurate only for 1 mSec Timer block)
Counter	Up Counter, Down Counter, Up/Down Counter, Special [Up/Down] Counter
Other Blocks	Analog Input, FTC, PIDT, Rampsoak
Memory Retention	10 years (2KB)

Supply Specification

Supply Voltage	18 to 30V DC
Power Consumption	6W Max

Dimensions (in mm)

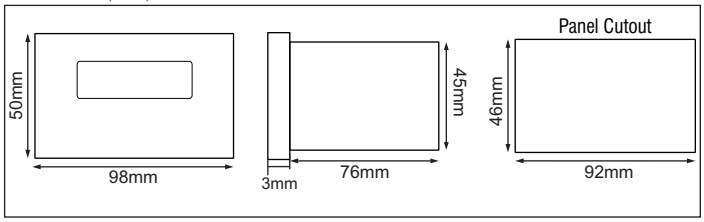

Terminal Connections

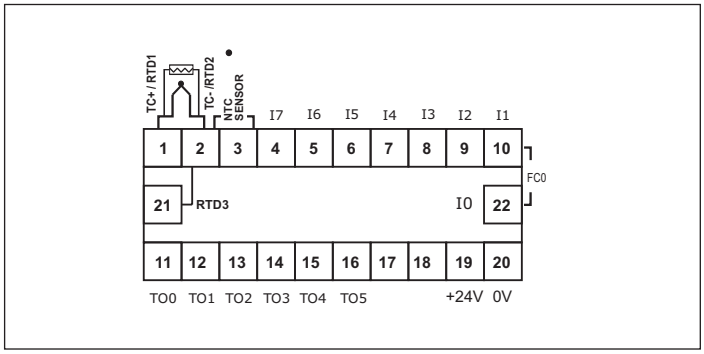

RS485 for downloading and networking	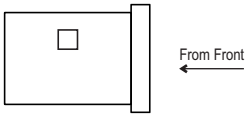
RS485 on side terminal (Communication port 1)	

Port Description

Port 1 (6 Pin Jack)	
Pin	**Description**
1	RS485 + ve
2	NC
3	NC
4	NC
5	NC
6	RS485 - ve

Ordering Information

Product Code	Description	Certification
TWIX-3-24VDC	PLC – 8DI, 6DO, 1AI (TC/RTD) & 24VDC	CE **RoHS** in Process

Accessories (To be ordered separately)

Downloading Cable	AC-USB-RS485-03
Networking	ACH-004 (RJ25 Cable) AC-IOEXP-03 (Expansion Adapter) AC-USB-RS485-02 (USB to RS485 Cable)