55XC

Plug / Panel Mount Timer

48 x 48mm

Features :

- Cyclic Timer with Unequal ON & OFF Time
- 6 Time Ranges
- Universal Supply Voltage
- LED Indications : Power ON, Relay ON
- Compact Size

Certifications : CE, c UL us E253771

Display Specifications

LED Indications	Power ON, Relay ON

Input Specifications

Accuracy	Setting : ±5% of F.S. Repeat : ±0.5% or 50 msec (F.S. = Full Scale)

Output Specifications

Relay Contact	2 C/O DPDT
Contact Rating	5A @ 250V AC / 24V DC, resistive

Functional Specifications

Modes	Cyclic ON first or OFF first
Time Ranges	0 - 1sec / min / hr (ON Time)
	0 - 10sec / min / hr (ON Time)
	0 - 1sec / min / hr (OFF Time)
	0 - 10sec / min / hr (OFF Time)
Resolution	0.1sec
Reset	On power interruption

Auxiliary Supply Specifications

Supply Voltage	20 to 240V AC (50 / 60Hz) 12 to 240V DC
Power Consumption	3VA max

Environmental Specifications

Temperature	Operating : 0 to 50°C (32 to 122°F) Storage : -20 to 75°C (-4 to 167°F)
Humidity (non - condensing)	95% RH

Mechanical Specifications

Mounting	Plug / Panel Mount
Weight	80gms

Dimensions

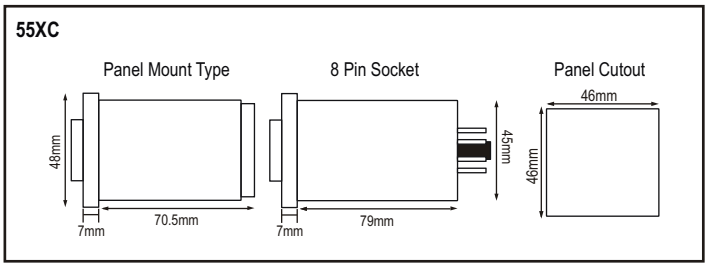

Terminal Connections

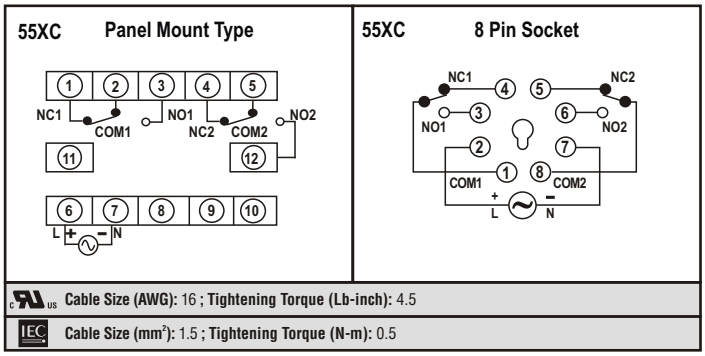

Timing Diagram

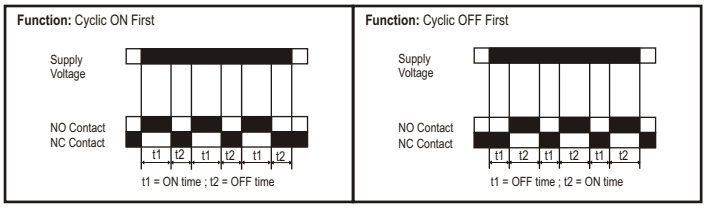

Compliance

Applicable EMI / EMC Standards		
Product Standard		
Category	**Reference Standards**	**Testing Level**
Electrostatic Discharge	IEC 61000-4-2	Level-3
Electrical Fast Transient / Brust	IEC 61000-4-4	Level-3
Electromagnetic Field	IEC 61000-4-3	Level-3
Surge	IEC 61000-4-5	Level-3
Conducted RF	IEC 61000-4-6	Level-2
Rated Power Frequency	IEC 61000-4-8	Level-4
Voltage Dip / Short Interruptions	IEC 61000-4-11	Level-3
Conducted Emissions	CISPR-11	Class-B
Rated Emissions	CISPR-22	Class-A
Emission & Immunity	IEC 61326-1	
Safety	IEC 61010-1	
PFMF (Passing criteria)	IEC 61000-4-8	Class A

Ordering Information

Product Code	Supply Voltage	Certification
55XC-P8	20 to 240V AC 12 to 240V DC	–
55XC-P8-CU	20 to 240V AC 12 to 240V DC	CE c UL us E253771
55XC-T8	20 to 240V AC 12 to 240V DC	–
55XC-T8-CU	20 to 240V AC 12 to 240V DC	CE c UL us E253771