800VPR-3

Voltage Protection Relay

DIN 22.5mm

Features:

- 3Ø - 3 Wire Input
- Monitors Under Voltage, Over Voltage, Phase Failure and Phase Sequence
- LED Indication : Power ON, Relay ON
- Trip Time Delay, Power ON Delay, Response Time, Recovery Time
- DIN Rail Mount
- Trip Delay (T) : 0 to 10 sec

Display Specifications

Type	Analog
No. of LED	2
LED Indication	Power ON, Relay ON

LED Indication Chart

Condition	'ON' LED	'R' LED
Nominal Condition	ON	ON
Fault Condition	ON	OFF

Input Specifications

Functions	
Measurements	Under Voltage, Over Voltage, Phase Failure, Phase Sequence
Time Settings	Trip Time Delay
Reset	Autoreset on Removal of Fault Condition
Electrical Connection	3Ø - 3 wire
Trip Settings	
Under Voltage	310 to 405V AC (L - L)
Over Voltage	425 to 520V AC (L - L)
Phase Failure	Yes
Phase Sequence	Yes
Trip Time Settings	
Trip Time Delay	0 - 10sec (For under and over voltages) Instantaneous (For phase loss & phase sequence)
Power On Delay	400ms
Hysteresis	
Voltage	2V
Accuracy	
Time Setting Accuracy	±5% of Full Scale
Voltage	±0.5% of Full Scale

Output Specifications

No. of Relays	1
Relay Contact	1 C/O (SPDT)
Relay Rating	NO / 5A, NC / 5A@250V AC, Resitive load

Auxiliary Supply Specifications

Supply Specification	Self Powered
Nominal Input Voltage	415V AC (L - L)
Operating Voltage	310 to 520V AC (L - L)
Power Consumption	22 VA max
Frequency	50 / 60Hz

Environmental Specifications

Temperature	Operating Temperature : 0^{0} to 50^{0}C Storage Temperature : -20^{0} to 70^{0}C
Humidity (non-condensing)	Upto 95% RH
Pollution Degree	
For PCB	2
For Product	3
Degree of Protection Devices	IP20

Mechanical Specifications

Mouting	DIN Rail
Weight	100gms

Dimensions

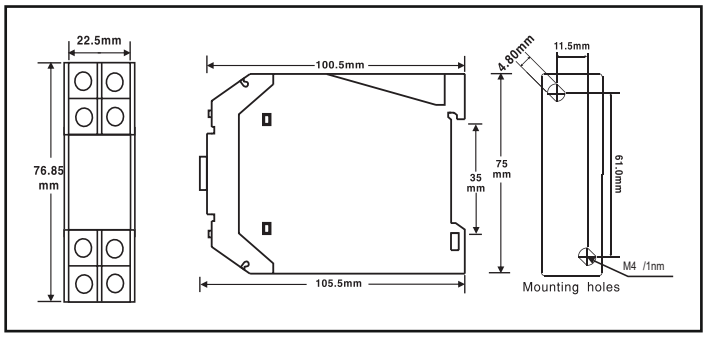

Terminal Connection

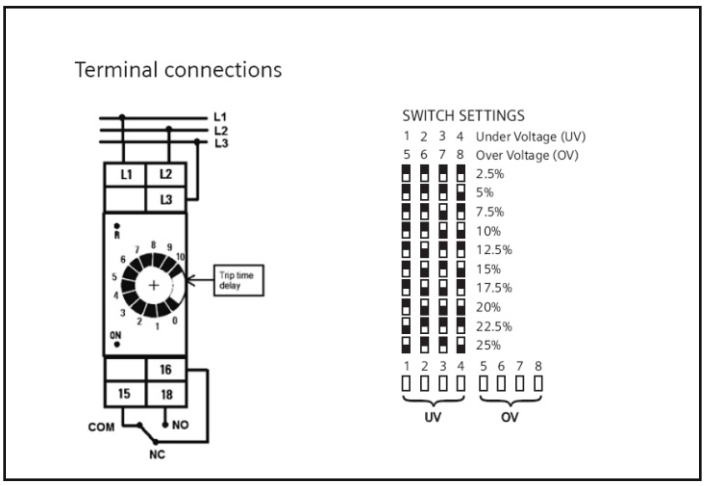

Timing Diagram

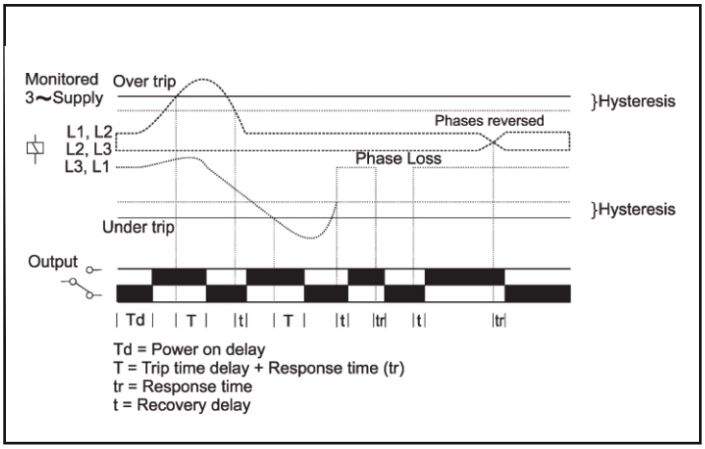

Ordering Information

Product Code	Operating Range	Certification
800VPR- 3	310 to 520V AC	--