selec

PPRD-4M-1-230V
Operating Instructions

OP724-V01

FEATURES

- Dry/Under Current, Over Current, Locked Current, Over Voltage, Under Voltage, Phase Failure and Overload Protection in 1Ø system
- Trip Time & Recovery Time Adjustable, Rapid Cycle Time
- Adjustable Hysteresis band
- Direct current measurement up to 32A
- Start & Stop Function by Push Button

SPECIFICATIONS

DISPLAY
3 Digits, Seven Segment LED Display

ELECTRICAL CONNECTION
1Ø-2 wire

OPERATING RANGE
180V-300V

FREQUENCY RANGE
50 - 60Hz

VA RATING
40VA max

RATED CURRENT
1 to 30A

CURRENT MEASURING RANGE
1 to 32A

VOLTAGE MEASURING RANGE
180 to 300 VAC (L-N)

TRIP PARAMETERS
Overload : NEMA Class : 5,10,15,20,30
Over Current : (I_R+1)A to 32A
[I_R = Rated current] & Step size : 1A
Under Current : 0.2A to (I_R-1)A
Step size 0.2A to 1A : 0.1A
Step size 1A to 30A : 1A
Locked Current : (I_R+1)A to 32A
Step size : 1A
Over Voltage : 180VAC to 300VAC (L-N)
Under Voltage : 180VAC to 300VAC (L-N)
Phase Loss : Yes (<160V)

RESOLUTION
Current : <10A = 0.01
>10A = 0.1

ACCURACY
Voltage : ±1% of 300V ± 1digit
Current : ±5% of I_R ± 1digit
Time : ±5% ± 100msec

TIME SETTINGS
Power ON Delay : 1sec (Fixed)
Trip Time Delay : 0 - 999sec
(Current & Voltage Parameters)
Phase Failure : Instantaneous
Reset Time : 1-999sec for Current & Voltage parameters
Response Time : <120ms
Reset Attempts : 3 (Fixed)
Reset Attempt Time Frame : 1 - 999 mins
Auto diagnostic present

HYSTERESIS
Voltage : 0 – 10V
(Not applicable for current parameters)

OUTPUT SPECIFICATIONS
1 Relay : 1N/O (SPST)

RELAY RATING
30A@277VAC

LED INDICATION
LED1 (Red) : Relay (Continuously ON after trip)
LED2 (Green) : Pump (ON when Pump is ON)

TST/RST FUNCTION :
TST : Relay Energized
RST : Relay De-energized
(At test function display show OK & Relay LED & Pump LED ON)

ENVIRONMENTAL SPECIFICATIONS
- Indoor use
- Altitude of up to 2000 meters
- Pollution degree II

Temperature : Operating : 0 to 55°C
Storage : -20 to 70°C
Humidity : Up to 95% RH, non-condensing

MECHANICAL SPECIFICATIONS
No. of Push Buttons : 3
Mounting : Din Rail Mount
Wire Size (max) : 4 sq.mm
Screw tightening torque : 0.5 N-M

WEIGHT: 190gms (approx.)

SAFETY PRECAUTIONS

All safety related codifications, symbols and instructions that appear in this operating manual or on the equipment must be strictly followed to ensure the safety of the operating personnel as well as the instrument.

If the equipment is not used in a manner specified by the manufacturer it might impair the protection provided by the equipment.

If there is physical damage to the unit then do not use it.

☛ Read complete instructions prior to installation and operation of the unit.

WIRING GUIDELINES

WARNING

1. To prevent the risk of electric shock power supply to the equipment must be kept OFF while doing the wiring arrangement.
2. Wiring shall be done strictly according to the terminal layout with shortest connections. Confirm that all connections are correct.

CAUTION

1. To ensure the safe operation of unit, check the wiring and connections.
2. It is recommended to test the unit periodically to the Satisfy the regulations.

LED INDICATION CHART

Various Conditions	'R' LED	'PUMP' LED
Healthy & Motor OFF	OFF	OFF
Healthy & Motor ON	OFF	ON
Trip	ON	OFF

TERMINAL CONNECTIONS

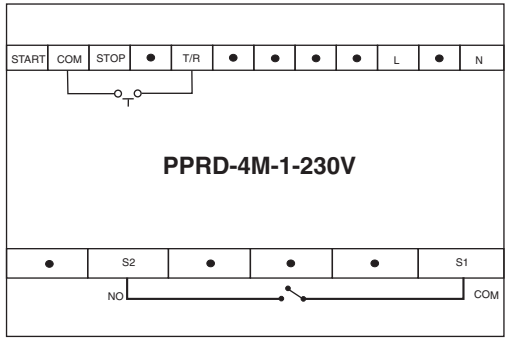

CONNECTION DIAGRAM

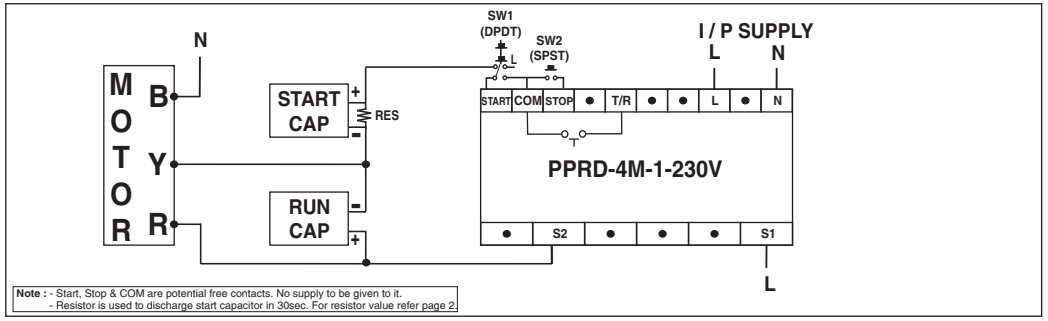

Note : - Start, Stop & COM are potential free contacts. No supply to be given to it.
- Resistor is used to discharge start capacitor in 30sec. For resistor value refer page 2.

MECHANICAL INSTALLATION/DIMENSION (in mm)

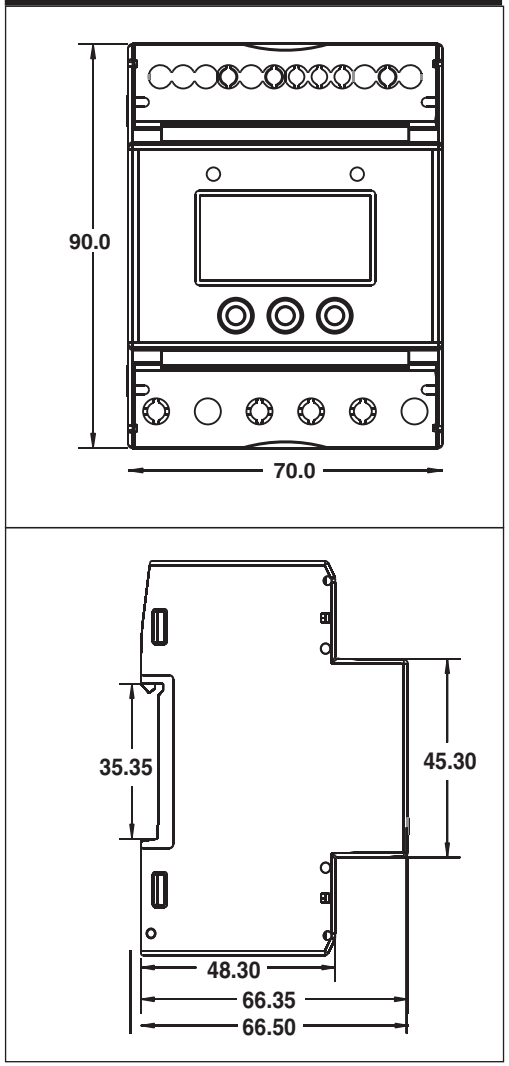

CONFIGURATION MENU

Press ↑ + ↓ for 3sec. to enter or exit configuration menu.

Press ↵ to save & scroll through sub menu		Press ↑ or ↓ to enter and change parameter value		
DISPLAY	**DESCRIPTION**	**DEFAULT VALUE**	**RANGE**	**CONDITION**
rt.C	Rated Current	5	1A to 30A	
CFG	Config Selection	no	YES / NO	If config setting is 'YES', then other pages / settings will be displayed.
OLr	Over Load	5	Class 5, 10, 15, 20, 30 (Starts with disable)	
OC	Over Current	10	(IR+1)A to 32A (Starts with disable)	This parameter is only applicable when motor is already started
UC	Under Current	2	0.2A to (IR-1)A (Starts with disable)	This parameter is only applicable when motor is already started
LC	Locked Current	10	(IR+1)A to 32A (Starts with disable)	This parameter is only applicable during motor start condition
OV	Over Voltage	280	180V to 300V (Starts with disable)	Over Voltage cannot be less than Under Voltage
UV	Under Voltage	180	180V to 300V (Starts with disable)	Under Voltage cannot be greater than Over Voltage
PHL	Phase Loss	Enb	Enable / Disable	
VtH	Voltage Hysteresis	6	0V to 10V	This parameter is applicable for voltage parameters
trP	Trip Time	1	0 to 999 sec	This parameter is applicable for Voltage and Current parameter
rEC	Recovery Time	5	1 to 999 sec	This parameter is applicable for Voltage and Current parameter
LCH	Latch	on	ON / OFF	
rCt	Rapid Cycle Time	30	1 to 999 mins	Enable only if auto mode selected
FCt	Factory Default	no	YES / NO	

Online KEYS	
CURRENT	Current value is shown in online mode.
TEST	Press ↑ key for 3sec.or short COM & T/R to test manually.
RESET	Press ↓ key for 3sec.or short COM & T/R to reset manually.
VOLTAGE	Press ↵ key to view voltage value in online mode and after releasing current value is displayed.
TRIP VALUE	Press ↑ key for 3sec. to display trip value.

WARRANTY / LIMITATIONS OF LIABILITY

Selec warrants the products to be free from defects in the materials and workmanship for a period of one year (or other period specified, if any) from the date of sale by Selec.

The warranty does not apply to defects resulting from any action of the buyer, including but not limited to improper handling, operating the product outside the specification limits or unauthorized disassembling / altering of the product. The warranty shall be VOID if the product shows evidence of having been tampered or being damaged due to usage in corrosive environment ; or current, heat, moisture or vibration ; improper specification ; wrong usage in an application; misuse or other operating conditions outside of Selec's control.

Selec shall not be responsible for special, indirect or consequential damages, loss of profits or commercial loss in any way connected with the products, whether such claim is based on contract, warranty, negligence or strict liability.

In no event shall the responsibility of Selec for any act exceed the individual price of the product on which liability is asserted.

In no event shall Selec be responsible for warranty or other claims regarding the products unless Selec's analysis confirms that the products were properly handled, stored, installed and maintained and not subject to contamination, abuse, misuse or inappropriate modification or repair.

Recommended resistor value as per different motor rating

Start Capacitor Value	Resistor Value
Upto 200uF/300VAC	100kOhm/2W

(Minimum 30sec delay required between two consecutive starts.)

NOTE :

- In configuration menu, if no key pressed for 30 sec. Then unit resumes to online page.
- Unit will show OVR when current is greater than 6 times of rated current.
- TEST/RESET function to be performed before turning ON Pump/Start key press & ensure application is disconnected from unit.
- If current goes below 0.1A unit will display zero current.
- In case if Peak current is greater than 32A when motors starts, increase Trip time to ensure unit does not remain in trip state.
- For peak current >32A unit will trip in locked current condition if not recovered at rated value within specified trip time.

ORDER CODE INFORMATION

Product	Supply	Certification	
		CE	cULus LISTED
PPRD-4M-1-230V	180V to 300V	—	—

(Specifications are subject to change, since development is a continuous process)

Selec Controls Pvt. Ltd., India

Factory Address :
EL-27/1, Electronic Zone, TTC Industrial Area, MIDC, Mahape, Navi Mumbai - 400 710, INDIA.
Tel. No. : +91-22-41 418 419/430 I Fax No. : +91-22-28471733
Toll free : 1800 227 353 (BSNL/MTNL Subscribers only)
Website : www.selec.com I Email : sales@selec.com