selec

**PPRD-4M-1-230V**
Operating Instructions

OP724-V01

## FEATURES

- Dry/Under Current, Over Current, Locked Current, Over Voltage, Under Voltage, Phase Failure and Overload Protection in 1Ø system
- Trip Time & Recovery Time Adjustable, Rapid Cycle Time
- Adjustable Hysteresis band
- Direct current measurement up to 32A
- Start & Stop Function by Push Button

## SPECIFICATIONS

**DISPLAY**
3 Digits, Seven Segment LED Display

**ELECTRICAL CONNECTION**
1Ø-2 wire

**OPERATING RANGE**
180V-300V

**FREQUENCY RANGE**
50 - 60Hz

**VA RATING**
40VA max

**RATED CURRENT**
1 to 30A

**CURRENT MEASURING RANGE**
1 to 32A

**VOLTAGE MEASURING RANGE**
180 to 300 VAC (L-N)

**TRIP PARAMETERS**
**Overload :** NEMA Class : 5,10,15,20,30
**Over Current** : ($I_R$+1)A to 32A
[$I_R$ = Rated current] & Step size : 1A
**Under Current** : 0.2A to ($I_R$-1)A
Step size 0.2A to 1A : 0.1A
Step size 1A to 30A : 1A
**Locked Current :** ($I_R$+1)A to 32A
Step size : 1A
**Over Voltage :** 180VAC to 300VAC (L-N)
**Under Voltage :** 180VAC to 300VAC (L-N)
**Phase Loss :** Yes (<160V)

**RESOLUTION**
Current : <10A = 0.01
>10A = 0.1

**ACCURACY**
Voltage : ±1% of 300V ± 1digit
Current : ±5% of $I_R$ ± 1digit
Time : ±5% ± 100msec

**TIME SETTINGS**
Power ON Delay : 1sec (Fixed)
Trip Time Delay : 0 - 999sec
(Current & Voltage Parameters)
Phase Failure : Instantaneous
Reset Time : 1-999sec for Current & Voltage parameters
Response Time : <120ms
Reset Attempts : 3 (Fixed)
Reset Attempt Time Frame : 1 - 999 mins
Auto diagnostic present

**HYSTERESIS**
Voltage : 0 – 10V
(Not applicable for current parameters)

**OUTPUT SPECIFICATIONS**
1 Relay : 1N/O (SPST)

**RELAY RATING**
30A@277VAC

**LED INDICATION**
LED1 (Red) : Relay (Continuously ON after trip)
LED2 (Green) : Pump (ON when Pump is ON)

**TST/RST FUNCTION :**
TST : Relay Energized
RST : Relay De-energized
(At test function display show OK & Relay LED & Pump LED ON)

**ENVIRONMENTAL SPECIFICATIONS**
- Indoor use
- Altitude of up to 2000 meters
- Pollution degree II

Temperature : Operating : 0 to 55°C
Storage : -20 to 70°C
Humidity : Up to 95% RH, non-condensing

**MECHANICAL SPECIFICATIONS**
No. of Push Buttons : 3
Mounting : Din Rail Mount
Wire Size (max) : 4 sq.mm
Screw tightening torque : 0.5 N-M

**WEIGHT**: 190gms (approx.)

## SAFETY PRECAUTIONS

All safety related codifications, symbols and instructions that appear in this operating manual or on the equipment must be strictly followed to ensure the safety of the operating personnel as well as the instrument.

If the equipment is not used in a manner specified by the manufacturer it might impair the protection provided by the equipment.

If there is physical damage to the unit then do not use it.

☛ Read complete instructions prior to installation and operation of the unit.

## WIRING GUIDELINES

**WARNING**

1. To prevent the risk of electric shock power supply to the equipment must be kept OFF while doing the wiring arrangement.
2. Wiring shall be done strictly according to the terminal layout with shortest connections. Confirm that all connections are correct.

**CAUTION**

1. To ensure the safe operation of unit, check the wiring and connections.
2. It is recommended to test the unit periodically to the Satisfy the regulations.

## LED INDICATION CHART

| Various Conditions | 'R' LED | 'PUMP' LED |
|---|---|---|
| Healthy & Motor OFF | OFF | OFF |
| Healthy & Motor ON | OFF | ON |
| Trip | ON | OFF |

## TERMINAL CONNECTIONS

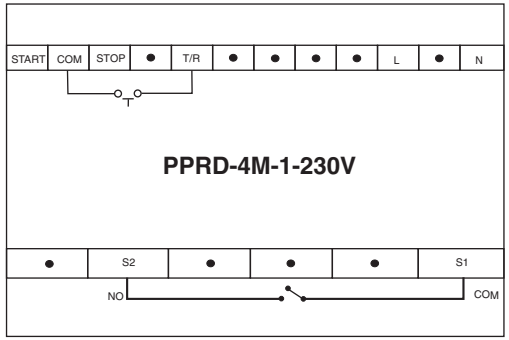


## CONNECTION DIAGRAM

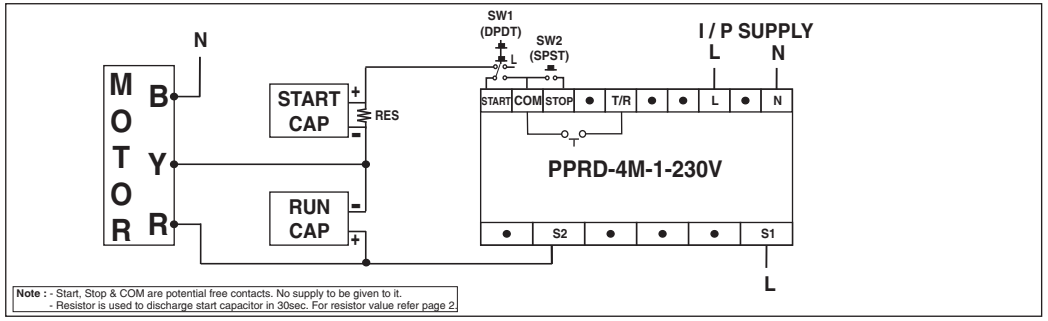


Note : - Start, Stop & COM are potential free contacts. No supply to be given to it.
- Resistor is used to discharge start capacitor in 30sec. For resistor value refer page 2.

## MECHANICAL INSTALLATION/DIMENSION (in mm)

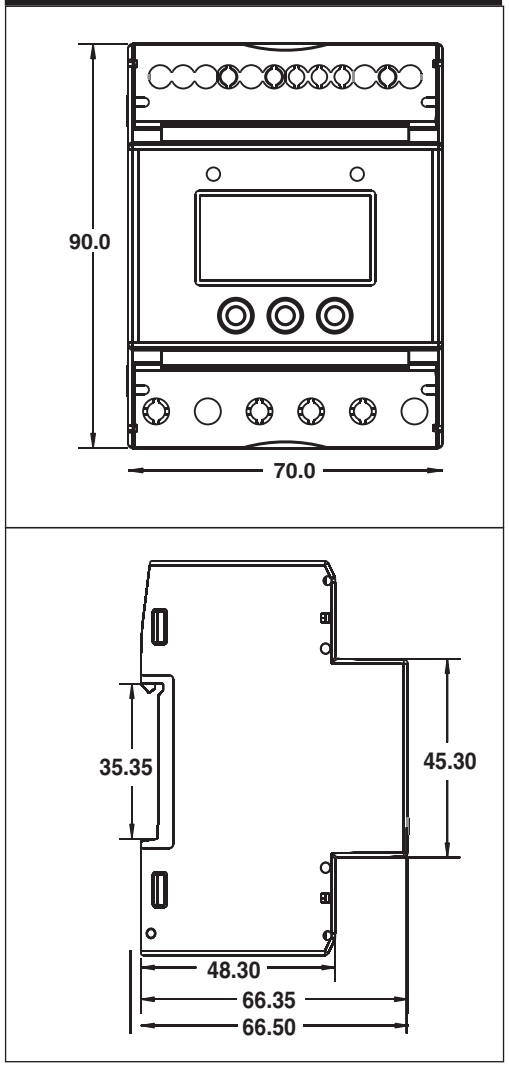

## CONFIGURATION MENU

**Press ↑ + ↓ for 3sec. to enter or exit configuration menu.**

| Press ↵ to save & scroll through sub menu | | Press ↑ or ↓ to enter and change parameter value | | |
|---|---|---|---|---|
| **DISPLAY** | **DESCRIPTION** | **DEFAULT VALUE** | **RANGE** | **CONDITION** |
| rt.C | Rated Current | 5 | 1A to 30A | |
| CFG | Config Selection | no | YES / NO | If config setting is 'YES', then other pages / settings will be displayed. |
| OLr | Over Load | 5 | Class 5, 10, 15, 20, 30 (Starts with disable) | |
| OC | Over Current | 10 | (IR+1)A to 32A (Starts with disable) | This parameter is only applicable when motor is already started |
| UC | Under Current | 2 | 0.2A to (IR-1)A (Starts with disable) | This parameter is only applicable when motor is already started |
| LC | Locked Current | 10 | (IR+1)A to 32A (Starts with disable) | This parameter is only applicable during motor start condition |
| OV | Over Voltage | 280 | 180V to 300V (Starts with disable) | Over Voltage cannot be less than Under Voltage |
| UV | Under Voltage | 180 | 180V to 300V (Starts with disable) | Under Voltage cannot be greater than Over Voltage |
| PHL | Phase Loss | Enb | Enable / Disable | |
| VtH | Voltage Hysteresis | 6 | 0V to 10V | This parameter is applicable for voltage parameters |
| trP | Trip Time | 1 | 0 to 999 sec | This parameter is applicable for Voltage and Current parameter |
| rEC | Recovery Time | 5 | 1 to 999 sec | This parameter is applicable for Voltage and Current parameter |
| LCH | Latch | on | ON / OFF | |
| rCt | Rapid Cycle Time | 30 | 1 to 999 mins | Enable only if auto mode selected |
| FCt | Factory Default | no | YES / NO | |

| Online KEYS | |
|---|---|
| CURRENT | Current value is shown in online mode. |
| TEST | Press ↑ key for 3sec.or short COM & T/R to test manually. |
| RESET | Press ↓ key for 3sec.or short COM & T/R to reset manually. |
| VOLTAGE | Press ↵ key to view voltage value in online mode and after releasing current value is displayed. |
| TRIP VALUE | Press ↑ key for 3sec. to display trip value. |

## WARRANTY / LIMITATIONS OF LIABILITY

Selec warrants the products to be free from defects in the materials and workmanship for a period of one year (or other period specified, if any) from the date of sale by Selec.

The warranty does not apply to defects resulting from any action of the buyer, including but not limited to improper handling, operating the product outside the specification limits or unauthorized disassembling / altering of the product. The warranty shall be VOID if the product shows evidence of having been tampered or being damaged due to usage in corrosive environment ; or current, heat, moisture or vibration ; improper specification ; wrong usage in an application; misuse or other operating conditions outside of Selec's control.

Selec shall not be responsible for special, indirect or consequential damages, loss of profits or commercial loss in any way connected with the products, whether such claim is based on contract, warranty, negligence or strict liability.

In no event shall the responsibility of Selec for any act exceed the individual price of the product on which liability is asserted.

In no event shall Selec be responsible for warranty or other claims regarding the products unless Selec's analysis confirms that the products were properly handled, stored, installed and maintained and not subject to contamination, abuse, misuse or inappropriate modification or repair.

**Recommended resistor value as per different motor rating**

| Start Capacitor Value | Resistor Value |
|---|---|
| Upto 200uF/300VAC | 100kOhm/2W |

(Minimum 30sec delay required between two consecutive starts.)

**NOTE :**

- In configuration menu, if no key pressed for 30 sec. Then unit resumes to online page.
- Unit will show OVR when current is greater than 6 times of rated current.
- TEST/RESET function to be performed before turning ON Pump/Start key press & ensure application is disconnected from unit.
- If current goes below 0.1A unit will display zero current.
- In case if Peak current is greater than 32A when motors starts, increase Trip time to ensure unit does not remain in trip state.
- For peak current >32A unit will trip in locked current condition if not recovered at rated value within specified trip time.

## ORDER CODE INFORMATION

| Product | Supply | Certification | |
|---|---|---|---|
| | | CE | cULus LISTED |
| PPRD-4M-1-230V | 180V to 300V | — | — |

( Specifications are subject to change, since development is a continuous process )


**Selec Controls Pvt. Ltd., India**

Factory Address :
EL-27/1, Electronic Zone, TTC Industrial Area, MIDC, Mahape, Navi Mumbai - 400 710, INDIA.
Tel. No. : +91-22-41 418 419/430 I Fax No. : +91-22-28471733
Toll free : 1800 227 353 (BSNL/MTNL Subscribers only)
Website : www.selec.com I Email : sales@selec.com