NQ¦R	Reset apparent energyG	Yes / No	No	YAH

NOTE : For resetting energy parameters user will be prompted the password. If correct password is entered, the user will be able to reset all energy parameters. This password will be a value which will be greater than the configuration password by 1.

EG=Z= I ¬ª·:¤-°=b j PMSJ`JaF

MODBUS REGISTER ADDRESSES LIST=E I ¬ª·:¤-°=b j PMSJ`JaF

Readable Parameters : [Length (Register) : 2 ;
Data Structure : Float]

Address	Hex Address	Parameter
30024	0x18	kW1
30026	0x1A	kW2
30028	0x1C	kW3
30030	0x1E	kVA1
30032	0x20	kVA2
30034	0x22	kVA3
30036	0x24	kVAr1
30038	0x26	kVAr2
30040	0x28	kVAr3
30042	0x2A	Total kW
30044	0x2C	Total kVA
30046	0x2E	Total kVAr
30048	0x30	PF1
30050	0x32	PF2
30052	0x34	PF3
30054	0x36	Average PF
PMMRU	M¶P^	q-²~ª=© t ¦
PMMSM	M¶P`	q-²~ª=© t ¦G
PMMSO	M¶Pb	q-²~ª=©s^¦
PMMSQ	M¶QM	q-²~ª=©s^¦G
PMMSS	M¶QO	q-²~ª=©s°¦
PMMSU	M¶QQ	q-²~ª=©s°¦G
PMMUQ	M¶RQ	© t ¦N=Ef«®F
PMMUS	M¶RS	© t ¦N=Ef«®FG
PMMUU	M¶RU	© t ¦O=Ef«®F
PMMVM	M¶R^	© t ¦O=Ef«®FG
PMMVO	M¶R`	© t ¦P=Ef«®F
PMMVQ	M¶Rb	© t ¦P=Ef«®FG
PMMVS	M¶SM	© t ¦N=Eb¶®F
PMMVU	M¶SO	© t ¦N=Eb¶®FG
PMNMM	M¶SQ	© t ¦O=Eb¶®F
PMNMO	M¶SU	© t ¦O=Eb¶®FG
PMNMQ	M¶S^	© t ¦P=Eb¶®F
PMNMS	M¶S`	© t ¦P=Eb¶®FG
PMNMU	M¶Sb	q-²~ª=© t ¦=Ef«®F
PMNNM	M¶TM	q-²~ª=© t ¦=Ef«®FG
PMNNO	M¶TO	q-²~ª=© t ¦=Eb¶®F
PMNNQ	M¶TQ	q-²~ª=© t ¦=Eb¶®FG
PMNNS	M¶TS	©s°¦N=Ef«®F
PMNNU	M¶TU	©s°¦N=Ef«®FG
PMNOM	M¶T^	©s°¦O=Ef«®F
PMNOO	M¶T`	©s°¦O=Ef«®FG
PMNOQ	M¶Tb	©s°¦P=Ef«®F
PMNOS	M¶UM	©s°¦P=Ef«®FG
PMNOU	M¶UO	©s°¦N=Eb¶®F
PMNPM	M¶UQ	©´N=Eb¶®FG
PMNPO	M¶US	©s°¦O=Eb¶®F
PMNPQ	M¶UU	©s°¦O=Eb¶®FG
PMNPS	M¶U^	©s°¦P=Eb¶®F
PMNPU	M¶U`	©s°¦P=Eb¶®FG
PMNQM	M¶Ub	q-²~ª=©s°¦=Ef«®F
PMNQO	M¶VM	q-²~ª=©s°¦=Ef«®FG
PMNQQ	M¶VO	q-²~ª=©s°¦=Eb¶®F
PMNQS	M¶VQ	q-²~ª=©s°¦=Eb¶®FG
PMNQU	M¶VS	©s^¦N
PMNRM	M¶VU	©s^¦NG
PMNRO	M¶V^	©s^¦O
PMNRQ	M¶V`	©s^¦OG
PMNRS	M¶Vb	©s^¦P
PMNRU	M¶NNM	©s^¦PG
PMNSM	M¶QS	q-²~ª=© t ¦=a d
PMNSO	M¶QS	q-²~ª=© t ¦=a dG
PMNSQ	M¶QS	q-²~ª=©s^¦=a d
PMNSS	M¶QS	q-²~ª=©s^¦=a dG
PMNSU	M¶QS	q-²~ª=©s°¦=a d
PMNTM	M¶QS	q-²~ª=©s°¦=a dG
PMNTO	M¶QS	q-²~ª=© t ¦= j ~§¬±Ha d
PMNTQ	M¶QS	q-²~ª=© t ¦= j ~§¬±Ha dG
PMNTS	M¶QS	q-²~ª=©s^¦= j ~§¬±Ha d
PMNTU	M¶QS	q-²~ª=©s^¦= j ~§¬±Ha dG
PMNUM	M¶QS	q-²~ª=©s°¦= j ~§¬±Ha d
PMNUO	M¶QS	q-²~ª=©s°¦= j ~§¬±Ha dG
PMNUQ	M¶QS	DG Sensing
PMSUQ	M¶QS	Serial no. (Data Structure : Hex)

k -²£W=DGD=~¢¢°£±±=~°£=¤-°=b§°±²=P=¢§¥§²=-¤=£¬£°¥·=´~ª³£±K=
=========c-°=²¦£=£¬£°¥·=´~ª³£=¥°£~²£°=²¦£¬=VVVVVV=
========= ~±£¢=-¬=`q¶mq=°~²§-I=¡-¬¡~²£¬~²£=²¦£=´~ª³£=
=========-¤= -²¦=~¢¢°£±±=-¤=±~«£=£¬£°¥·K
b¶~«®ª£W=c-°=q-²~ª=© t ¦I=s~ª³£=~²=PMMRU=§±=TSRQKPO=
=========~¬¢=´~ª³£=~²=PMMSM=§±=VUK=^¡²³~ª=´~ª³£=-¤=q-²~ª
=========© t ¦=§±=VUTSRQKPOK

s~ª³£=~²= s~ª³£=~²=
=PMMSM =PMMRU
VU TSRQKPO
VUTSRQKPO
^¡²³~ª=´~ª³£=-¬=¢§±®ª~·

AUTOMATIC / MANUAL MODE DESCRIPTION

Press✔ key for 5 seconds to toggle between Automatic and Manual mode.
Note : By default unit operates in automatic mode.
In automatic mode online pages scroll automatically at the rate of 5 seconds per page.
In automatic mode when any key is pressed, unit temporarily switches to manual mode and the appropriate page is displayed, also if any key is not pressed for 5 sec, unit resumes automatic mode.
k-²£W= I ¬ª·:c-°=b j PMSJ`Ja

USER GUIDE

LED INDICATIONS

- **INT :** The INT LED provides optical output for calibration verification as well as visual indication of energy integration. The pulse rate is 1000 Pulses/kWh.

- bumW=bum=i ba=¥§´£±=²¦£=§¬¢§¡~²§-¬=-¤=°£´£°±~ª=-¤ one or more CT connections or presence of negative power in any or all phases. In such cases meter may not indicate the correct energy consumption. The CT should be connected to the meter with correct polarities.

kbq t l oh=pb i b`qf l k=^k a= t fofk d=fkm r q

Network selection in configuration « -¢£	t §°§¬¥=
PmQ t	PmQ t
PmP t	PmP t
NmO t =EmNLmOLmPF	NmO t =EmNLmOLmPF

Note : P1, P2 and P3 are Three Phase.

MODBUS REGISTER ADDRESSES LIST=E I ¬ª·:¤-°=b j PMSJ`JaF

Readable / writable parameters : [Data Structure : Integer]

Address	Hex Address	Parameter	Range		Length (Register)
40000	0x00	Password	Min value : 0	Max value : 9998	1
40001	0x01	N/W Selection	Value : 0	Meaning : 3P4W	1
			Value : 1	Meaning : 3P3W	1
			Value : 2	Meaning : 1P2W-R	1
			Value : 3	Meaning : 1P2W-Y	1
			Value : 4	Meaning : 1P2W-B	1
40002	0x02	CT Secondary	Min value : 1	Max value : 5	1
40003	0x03	CT primary (CT Secondary=5)	Min value : 5	Max value : 10000	1
		CT primary (CT Secondary=1)	Min value : 1	Max value : 10000	
40004	0x04	PT Secondary	Min value : 100	Max value : 500	1
40005	0x05	PT primary	Min value : 100	Max value : 500kV	2
QMMNS	M¶NM	^³²-:o£±-ª³²§-¬	s~ª³£=W=M	j £~§¬¥=W=^³²-	1
			s~ª³£=W=N	j £~§¬¥=W=`-³¬²	1
QMMNT	M¶NN	b¶²£¬¢£¢=o£±-ª³²§-¬	s~ª³£=W=M	j £~§¬¥=W= I cc	1
			s~ª³£=W=N	j £~§¬¥=W= I k	1
40007	0x07	Slave id	Min value : 1	Max value : 255	1
40008	0x08	Baud rate	Value : 0x0000	Meaning : 300	1
			Value : 0x0001	Meaning : 600	
			Value : 0x0002	Meaning : 1200	
			Value : 0x0003	Meaning : 2400	
			Value : 0x0004	Meaning : 4800	
			Value : 0x0005	Meaning : 9600	
			Value : 0x0006	Meaning : 19200	
40009	0x09	Parity	Value : 0x0000	Meaning : None	1
			Value : 0x0001	Meaning : Odd	
			Value : 0x0002	Meaning : Even	
40010	0x0A	Stop bit	Value : 0x0000	Meaning : 1	1
			Value : 0x0001	Meaning : 2	
40012	0x0C	Factory Default	Value : 1	Meaning : Set to factory setting range	1
40013	0x0D	Reset Active Energy	Value : 1	Meaning : Reset Total Active Energy	1
40014	0x0F	Reset Apparent Energy	Value : 1	Meaning : Reset Total Apparent Energy	1
40015	0x10	Reset Reactive Energy	Value : 1	Meaning : Reset Total Reactive Energy	1
40042	0x2A	Reset Active Energy DG	Value : 1	Meaning : Reset Total Active Energy of DG	1
40043	0x2B	Reset Apparent Energy DG	Value : 1	Meaning : Reset Total Reactive Energy of DG	1
40044	0x2C	Reset Reactive Energy DG	Value : 1	Meaning : Reset Total Apparent Energy of DG	1

`lkkb`qflk=af^do^j=clo=`lj jrkf`^qflk

CONNECTION DIAGRAM FOR COMMUNICATION

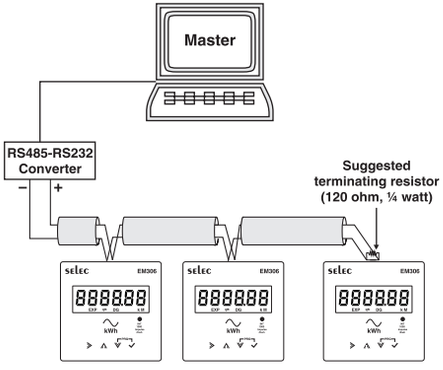

Contact sales for PC based monitoring software to communicate with the meters.

k-²£Ⅲ=l¬ª·=¤-°=b j PMSJ`Ja

^mmif`^qflk=lc=afdfq^i=fkmrq

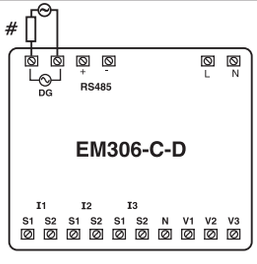

k-²£Ⅲ=l¬ª·=¤-°=b j PMSJ`Ja

^mmif`^qflk=lc=mr ipb=lrqmrq

● **ENERGY CONTROLLER**

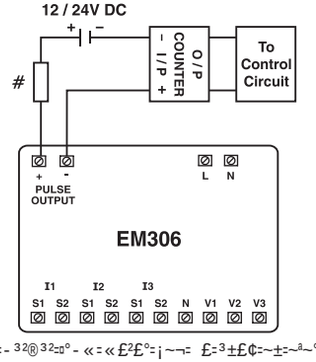

m³ª±£=-³²®³²=¤°-«=«£²£°=¡~¬=£=³±£¢=~±=~ª~°«=¥£¬£°~²-°-°=²-²~ª=£¬£°¥·=¡-¬²°-ªª£°=·=§¬²£°¤~¡§¬¥§=µ§²¦=m°£=±£²~ ª£=counter and control circuits (Contactors, Relay, Trip `§°¡³§²F¦K

= q¦£=¡-³¬²£°=§±=ª-~¢£¢=µ§²¦=²¦£=«~¶§«³«=£¬£°¥·=¡-¬±³«®²§-¬¦= t ¦£¬=¡-³¬²=°£~¡¦£±=±£²®-§¬²=§²=®°-´§¢£±=-³²®³²=²-¡-¬²°-ª=¡§°¡³§²=²-²~©£=~®®°-®°§~²£=~¡²§-¬¦=

All fuse types : 0.5A class CC UL type
0.5A fast acting 600V

k-²£Ⅲ=l¬ª·=¤-°=b j PMS

TYPICAL WIRING DIAGRAM

3 PHASE 4-WIRE (COMMONLY USED)

3 Ø - 4 WIRE, 3 CT'S

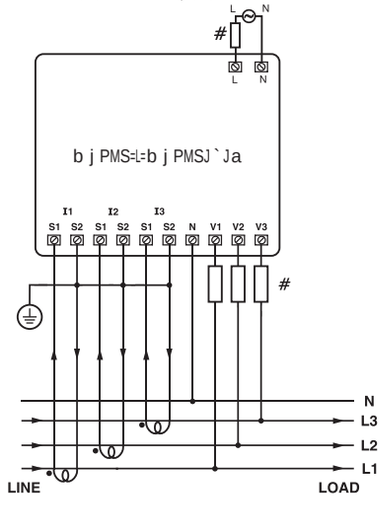

3 Ø - 4 WIRE, 3 CT'S and 3 PT'S

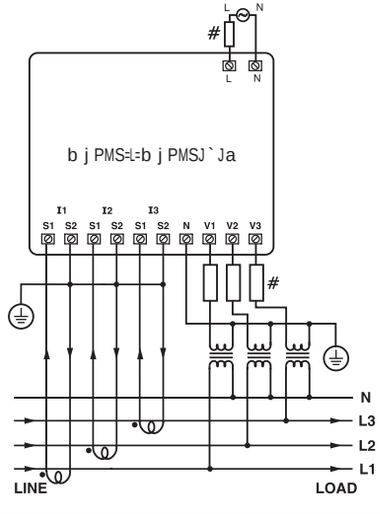

3 PHASE 3-WIRE

3 Ø - 3 WIRE, 2 CT'S

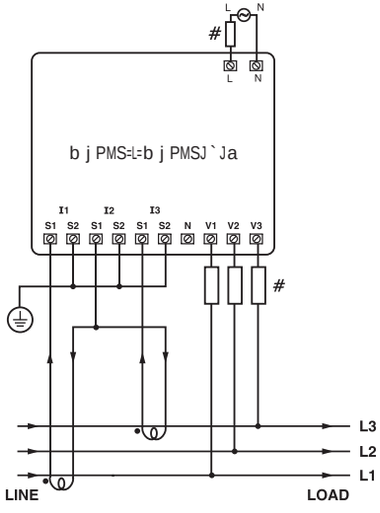

3 Ø - 3 WIRE, 2 CT'S and 2 PT'S

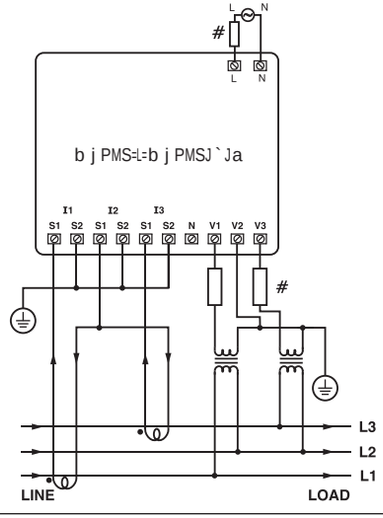

1 PHASE - 2 WIRE

1 Ø - 2 WIRE, 1 CT

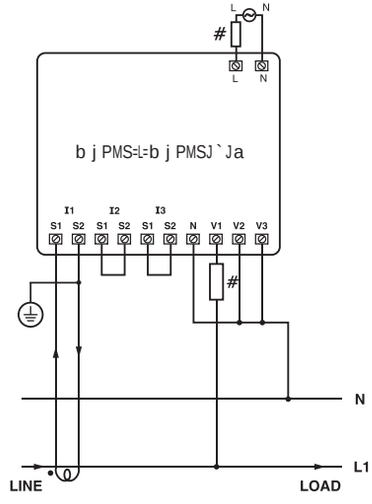

@=^ªª=¤³±£=²·®£±=Ⅲ=MKR^=¡ª~±±=`=ri=²·®£=
==========MKR^=¤~±²=~¡²§¬¥=SMMs

ird=abp`ofmqflk

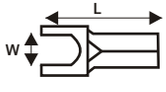

1. Length L (mm)	11.20
2. Width W (mm)	6.35

Ek lqb=Ⅲ=²-= £=µ§°£¢=µ§²¦=ird=-¬ª·F

^mmif`^qflk=lc=mr ipb=lrqmrq

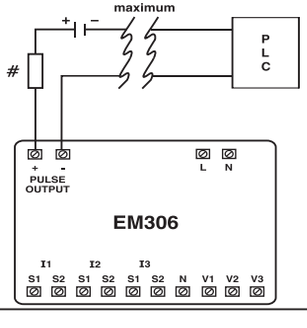

● **mol`bpp=fkqbdo^qflk**

m³ª±£=-³²®³²=¤°-«=«£²£°=¡~¬= £=§¬²£°¤~¡£¢=§¬²-=~=®°-¡£±±=²¦°-³¥¦=~=mi`=¤-°=-¬=ª§¬£=¡-¬²°-ª=-¤=£¬£°¥·=¡-¬²£¬²=§¬=²¦£=®°-¡£±±K

f¤=²¦£=mi`=¦~±=~=±£ª¤=£¶¡§²£¢=¢§¥§²~ª=§¬®³²I=b¶²£°¬~ª=a`=±³®®ª·=§±=¬-²=¬££¢£¢

q¦£=© t ¦=®³ª±£=§±=~ª±-=³±£¢=²-=¢£´§¡£=~´£°~¥£=© t ¦=§¬¤-°«~²§-¬=~²=¦£=mi`K

k-²£Ⅲ=l¬ª·=¤-°=b j PMS

p®£¡§§¡~²§-¬±=~°£=±³ ¨£¡²-²-=¡¦~¬¥£I=±§¬¡£=¢£´£ª-®«£¬²=§±=~=¡-¬²§¬³-³±=®°-¡£±±K

p£ª£¡=`-¬²°-ª±=m´²K=i²¢K

Factory Address : EL-27/1, Electronic Zone, TTC Industrial Area, MIDC, Mahape, Navi Mumbai - 400 710, INDIA.
Website : www.selec.com
For Sales & Support,
Tel. No. : +91-22-41 418 469/452
Mob No. : +9136977315. **Email :** sales@selec.com
For Service,
Tel. No. : +91-7498077172 / +91-7400069545
Email : service@selec.com