selec

# EM306 / EM306-C-D

## Operating Instructions

OP1029-V04

## SPECIFICATION

**DISPLAY**
1 Row of 6 Digits to show electrical parameters
7 Segment LED Display 71*24mm
Digital integrated with parameter units

**INDICATION**
**EXP** - CT Reverse Detection
**k** - Kilo
**M** - Mega
⇄* - Communication in progress
**DG** * - DG sensing

**WIRING INPUT**
3Ø - 4 wire, 3Ø - 3 wire, and 1Ø - 2 wire system

**RATED INPUT VOLTAGE**
11 to 277 VAC (L-N): 19 to 480 VAC (L-L)CATIII
11 to 300 VAC (L-N): 19 to 519 VAC (L-L)CATII
Installation Catagory III

**FREQUENCY RANGE**
45-65 Hz

**RATED INPUT CURRENT**
Nominal 5A AC (Min-50mA, Max-6A)

**BURDEN**
0.5 VA@5A per phase

**CT PRIMARY**
1A / 5A to 10,000A (Programmable for any value)
**Note :** 1A to 10,000A if CT secondary is 1 else CT primary is 5A to 10,000A

**CT SECONDARY**
1A or 5A (programmable)

**PT PRIMARY**
100V to 500kV (Programmable for any value)

**PT SECONDARY**
100 to 500V (Programmable for any value)

**POWER CONSUMPTION**
Less than 8VA

**DISPLAY UPDATE TIME** *
1 sec for all parameters

**DISPLAY SCROLLING** *
Automatic or Manual (Programmable)

**ENVIRONMENTAL CONDITIONS**
- Indoor use
- Altitude of up to 2000 meters
- Pollution degree II

Temperature : Operating : -10°C to 55°C
Storage : -20°C to 75°C
Humidity : Up to 85% non-condensingphase

**PROTECTION CLASS :** II

**INSTALLATION CATAGORY :** III

**MOUNTING** : Panel mounting

**WEIGHT** : 210gms

**OUTPUT (Only for EM306)**
Pulse output : Voltage range external 24V DC max
Current capacity : 100mA
Pulse width : 100ms ±5ms

**DIGITAL INPUT** *
Voltage(L-N): 85 to 276V AC
**(Note: * = Only for EM306-C-D)**

## RESOLUTION

| PT Ratio x CT Ratio | kWh | Pulse output kWh/pulse |
|---|---|---|
| <15 | 0.01K | 0.01 |
| <150 | 0.1K | 0.1 |
| <1500 | 1K | 1 |
| <15000 | 0.01M | 10 |
| <150000 | 0.1M | 100 |
| ≥150000 | 1M | 1000 |

**NOTE**
1 ) Power resolution is automatically adjusted.
2 ) For power factor, resolution is 0.001.

## ORDER CODE INFORMATION

| Product | Supply Voltage | Certification | |
|---|---|---|---|
| | | CE | cULus LISTED |
| EM306 | 85 to 276V AC, 50/60Hz | — | — |
| EM306-C-D | 85 to 276V AC, 50/60Hz | — | — |

## SERIAL COMMUNICATION (Only for EM306-C-D)

| | |
|---|---|
| **Interface standard and protocol** | RS485 and MODBUS RTU |
| **Communication address** | 1 to 255 |
| **Transmission mode** | Half duplex |
| **Data types** | Float, Integer and Hex |
| **Transmission distance** | 500m maximum |
| **Transmission Speed** | 300, 600,1200, 2400, 4800, 9600,19200 (in bps) |
| **Parity** | None, Odd, Even |
| **Stop bits** | 1 or 2 |

## ACCURACY

| Measurement | Accuracy |
|---|---|
| Active Power* | 1% |
| Apparent power* | 1% |
| Reactive Power* | 2% |
| Power factor* | ±0.01 Digit |
| Active energy | Class 1 |
| Reactive energy* | Class 2 |

**(Note: * = Only for EM306-C-D)**

## SAFETY PRECAUTIONS

All safety related codifications, symbols and instructions that appear in this operating manual or on the equipment must be strictly followed to ensure the safety of the operating personnel as well as the instrument.

If the equipment is not used in a manner specified by the manufacturer it might impair the protection provided by the equipment.

- Do not use the equipment if there is any mechanical damage.
- Ensure that the equipment is supplied with correct voltage.

**⚠ CAUTION :**

1. Read complete instructions prior to installation and operation of the unit.
2. Risk of electric shock.
3. The equipment in its installed state must not come in close proximity to any heating sources, oils, steam, caustic vapors or other unwanted process by products.

**⚠ WARNING :**

1. To prevent the risk of electric shock, power supply to the equipment must be kept OFF while doing the wiring arrangement.
2. Wiring shall be done strictly according to the terminal layout. Confirm that all connections are correct.
3. Use lugged terminals.
4. To reduce electromagnetic interference use of wires with adequate ratings and twists of the same in equal size shall be made with shortest connections.
5. Layout of connecting cables shall be away from any internal EMI source.
6. Cable used for connection to power source, must have a cross section of 0.5mm² to 2.5mm² ( 20 to 14AWG ; 75°C (minimum)). These wires shall have current carrying capacity of 6A.
7. Copper cable should be used. ( Stranded or Single core cable ).
8. Before attempting work on device, ensure absence of voltages using appropriate voltage detection device.
9. Recommended CT : Measuring type.

## INSTALLATION GUIDELINES

**⚠ CAUTION :**

1. This equipment, being built-in-type, normally becomes a part of main control panel and in such case the terminals do not remain accessible to the end user after installation and internal wiring.
2. Conductors must not come in contact with the internal circuitry of the equipment or else it may lead to a safety hazard that may in turn endanger life or cause electrical shock to the operator.
3. Circuit breaker or mains switch must be installed between power source and supply terminals to facilitate power 'ON' or 'OFF' function. However this switch or breaker must be installed in a convenient position normally accessible to the operator.
4. Before disconnecting the secondary of the external current transformer from the equipment, make sure that the current transformer is short circuited to avoid risk of electrical shock and injury.
5. The equipment shall not be installed in environmental conditions other than those mentioned in this manual.
6. The equipment does not have a built-in-type fuse. Installation of external fuse of rating 275V AC / 0.5Amp for electrical circuitry / battery is highly recommended.

## MECHANICAL INSTALLATION

For installing the meter
1. Prepare the panel cutout with proper dimensions as shown below.
2. Push the meter into the panel cutout. Secure the meter in its place by fitting the clamp on the rear side. Fit clamps on both sides in diagonally opposite location for optimum fitting.
3. For proper sealing, tighten the screws evenly with required torque.

Terminal screw tightening torque:
0.68 N-m to 0.79 N-m (6.018 In-Lb to 6.992 In-Lb)
Screw clamp tightening torque : 0.1 N-m (0.885 Lb-inch)

| OUTLINE Dimensions (in mm) | PANEL CUTOUT Dimensions (in mm) |
|---|---|

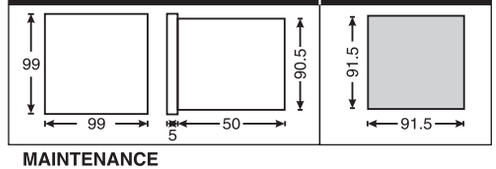


**MAINTENANCE**
1. The equipment should be cleaned regularly to avoid blockage of ventilating parts.
2. Clean the equipment with a clean dry or damp cloth. Do not use any cleaning agent other than water.

## TERMINAL CONNECTIONS

**EM306 CONNECTIONS DIAGRAM**

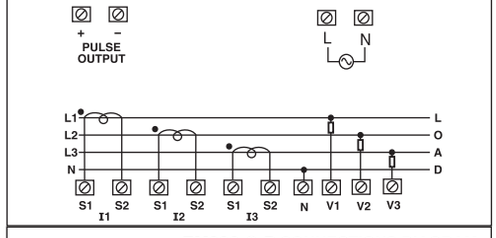


**EM306-C-D CONNECTIONS DIAGRAM**

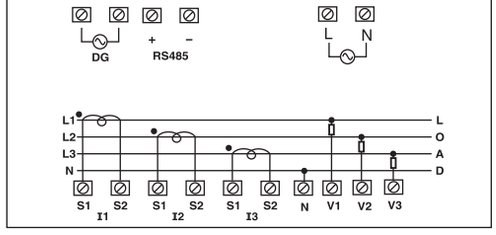


## FRONT PANEL DESCRIPTION

**ONLINE PAGE DESCRIPTION (Only for EM306)**

Display will show only kWh page.

| Press "▼" | Display roll-over count of kWh. | 0 |
|---|---|---|

**ONLINE PAGE DESCRIPTION (Only for EM306-C-D)**

By default total kWh page will be displayed and after pressing any key,next page of last accessed page will be shown.If no key is pressed for 60 seconds in manual mode,display will go to default page i.e total kWh of mains, & if DG is on, display will go to total kWh of DG.

| For 3P4W | | |
|---|---|---|
| **KEY PRESS** | **ONLINE PAGE DESCRIPTION** | **DISPLAY** |
| **Press "PF"** | **The first screen** : Displays units of R phase power factor for a second, then display value. | PF 1 |
| | **The second screen** : Displays unit of Y phase power factor for a second, then display value. | PF2 |
| | **The third screen** : Displays unit of B phase power factor for a second, then display value. | PF3 |
| | **The fourth screen** : Displays unit of average of all three phase power factor then display value. | PFAVG |
| | **NOTE:** 1.For 3Ø 3W system, only 4th screen will be visible.<br>2.For 1Ø 2W-R system, only 1st screen will be visible.<br>3.For 1Ø 2W-Y system, only 2nd screen will be visible.<br>4.For 1Ø 2W-B system, only 3rd screen will be visible. | |

| For 3P4W | | |
|---|---|---|
| **KEY PRESS** | **ONLINE PAGE DESCRIPTION** | **DISPLAY** |
| **Press "P"** | **The first screen** : Displays unit of active power of R phase for a second, then displays value. | W 1 |
| | **The second screen** : Displays unit of active power of Y phase for a second, then display value. | W2 |
| | **The third screen** : Displays unit of active power of B phase for a second, then display value. | W3 |
| | **The fourth screen** : Displays unit of total active power for a second, then display value. | Wt |
| | **The fifth screen** : Displays unit of active energy of R phase for a second, then display value. | WH 1 |
| | **The sixth screen** : Displays unit of active energy of Y phase for a second, then display value. | WH2 |
| | **The seventh screen** : Displays unit of active energy of B phase for a second, then display value. | WH3 |
| | **The eighth screen** : Displays unit of total active energy of MAINS source for a second, then display value. | n. WHt |
| | **The ninth screen** : Displays unit of total active energy of DG source for a second, then display value. DG symbol ON | WHt |
| | **The tenth screen** : Displays unit of total active energy of MAINS + DG source for a second, then display value. DG symbol ON. | n. WHt |
| | **NOTE:** | |

| Network | Visible screen |
|---|---|
| 3Ø 3W | 4th, 8th, 9th &10th |
| 1Ø 2W-R | 1st, 8th, 9th &10th |
| 1Ø 2W-Y | 2nd, 8th, 9th &10th |
| 1Ø 2W-B | 3rd, 8th, 9th &10th |
| DG | 1st, 2nd, 3rd, 4th, 8th, 9th &10th |

| | | |
|---|---|---|
| **Press "Q"** | **The first screen** : Displays unit of reactive power of R phase for a second, then display value. | VAr 1 |
| | **The second screen** : Displays unit of reactive power of Y phase for a second, then display value. | VAr2 |
| | **The third screen** : Displays unit of reactive power of B phase for a second, then display value. | VAr3 |
| | **The fourth screen** : Displays unit of total reactive power for a second, then display value. | VArt |
| | **The fifth screen** : Displays unit of reactive energy of R phase for a second, then display value. | VArH1 |
| | **The sixth screen** : Displays unit of reactive energy of Y phase for a second, then display value. | VArH2 |
| | **The seventh screen** : Displays unit of reactive energy of B phase for a second, then display value. | VArH3 |
| | **The eighth screen** : Displays unit of total reactive energy of MAINS source for a second, then display value. | n.VArHt |
| | **The ninth screen** : Displays unit of total reactive energy of DG source for a second, then display value. DG symbol ON | VArHt |
| | **The tenth screen** : Displays unit of total reactive energy of MAINS + DG source for a second, then display value. DG symbol ON. | n.VArHt |
| | **NOTE:** | |

| Network | Visible screen |
|---|---|
| 3Ø 3W | 4th, 8th, 9th &10th |
| 1Ø 2W-R | 1st, 8th, 9th &10th |
| 1Ø 2W-Y | 2nd, 8th, 9th &10th |
| 1Ø 2W-B | 3rd, 8th, 9th &10th |
| DG | 1st, 2nd, 3rd, 4th, 8th, 9th &10th |

| For 3P4W | | |
|---|---|---|
| **KEY PRESS** | **ONLINE PAGE DESCRIPTION** | **DISPLAY** |
| **Press "S"** | **The first screen** : Displays unit of Apparent power of R phase for a second, then display value. | VA 1 |
| | **The second screen** : Displays unit of Apparent power of Y phase for a second, then display value. | VA2 |
| | **The third screen** : Displays unit of Apparent power of B phase for a second, then display value. | VA3 |
| | **The fourth screen** : Displays unit of total Apparent power for a second, then display value. | VAt |
| | **The fifth screen** : Displays unit of Apparent energy of R phase for a second, then display value. | VAH 1 |
| | **The sixth screen** : Displays unit of Apparent energy of Y phase for a second, then display value. | VAH2 |
| | **The seventh screen** : Displays unit of Apparent energy of B phase for a second, then display value. | VAH3 |
| | **The eighth screen** : Displays unit of total Apparent energy of MAINS source for a second, then display value. | n. VAHt |
| | **The ninth screen** : Displays unit of total Apparent energy of DG source for a second, then display value. DG symbol ON | VAHt |
| | **The tenth screen** : Displays unit of total Apparent energy of MAINS + DG source for a second, then display value. DG symbol ON. | n. VAHt |
| | **NOTE:** | |

| Network | Visible screen |
|---|---|
| 3Ø 3W | 4th, 8th, 9th &10th |
| 1Ø 2W-R | 1st, 8th, 9th &10th |
| 1Ø 2W-Y | 2nd, 8th, 9th &10th |
| 1Ø 2W-B | 3rd, 8th, 9th &10th |
| DG | 1st, 2nd, 3rd, 4th, 8th, 9th &10th |

**Note:** Energy value shown based on config selection as given below.

| Auto resolution | Extended resolution | Energy Mode |
|---|---|---|
| Auto | NA | Auto Resolution |
| Count | ON | 9 digit count |
| Count | OFF | 6 digit count |

**Auto resolution:** Resolution of energy changes based on increasing energy.

**9 digit count:** Max energy value is 999999999 based on CTxPT ratio.
Energy value shown on 2 different pages account for increased maximum value.

For example: If energy value is 1234567.89 kWh then value on display will be

First Page: r 123

Second Page: 4567.89 K

**6 digit count:** Max energy value is 999999 based on CTxPT ratio.
Energy value shown on single page.
For example: If energy value is 1234.56 kWh then value on display will be

First Page: 1234.56 K

## SERIAL NUMBER DESCRIPTION

Press ▲ key for 10 sec. to display serial number.

**Note:** When the unit is set to auto resolution or 9 digit count and the energy value exceeds 999999 based on CTxPT ratio, switching to a 6 digit count will result in the truncation of the energy value, erasing any digits beyond 999999.
**For Example:** In Auto resolution and 9 digit count, if energy value is 1234567.89 kWh, switching to a 6 digit count will truncate energy value to 4567.89 kWh.

## CONFIGURATION

**Note :** Setting should be done by professional after going through this user manual and having understood the application situation.
For the configuration setting mode:

- Use ◀+✔ key for 3 sec to enter and exit from configuration menu.
- Use ◀ key to shift the cursor for next digit and to edit.
  Use ▲ key to increment the configuration value.
  Use ▼ key to decrement the configuration.
- Use ✔ key for save parameter value & go to the next page

| Config. page | Function | Range or Selection | Factory Setting | |
|---|---|---|---|---|
| | Password | 0000 to 9998 | 1000 | PASWrd |
| 1 | Change Password | No / Yes | No | CNGPWd |
| 1.1 | New Password | 0000 to 9998 | | NEWPWd |
| 2 | Network Selection | 3P4W, 3P3W, 1P2W-R, 1P2W-Y and 1P2W-B | 3P4W | NW SEL |
| 3 | CT Secondary | 1A or 5A | 5 | Ct SEC |
| 4 | CT Primary | 1A, 5A to 10,000A | 5 | Ct PRI |
| 5 | PT Secondary | 100V to 500V | 350 | Pt SEC |
| 6 | PT primary | 100V to 500kV | 350 | Pt PRI |
| 7 | Auto resolution | Auto / Count | Auto | AUtrES |
| 8 | Extended resolution | ON / OFF | ON | EXtrES |
| 9 | Slave Id* | 1 to 255 | 1 | SLVEId |
| 10 | Baud Rate* | 300, 600, 1200, 2400, 4800, 9600 and 19200 (bps) | 9600 | bdrAtE |
| 11 | Parity* | None, Odd, Even | None | PARIty |
| 12 | Stop Bit* | 1 or 2 | 1 | StPbIt |
| 13 | Factory default | Yes / No | No | dEFALt |
| 14 | Reset energy | Yes / No | No | rStENG |
| 14.1 | Password | 0001 to 9999 | 1001 | PASWrd |
| 14.2 | Source Selection* | Source1(Mains) / Source2 (Generator) | Source 1 (Mains) | SOURCE |
| 14.3 | Reset active energy | Yes / No | No | WH |
| 14.4 | Reset reactive energy* | Yes / No | No | VArH |

(* = Only for EM306-C-D)

| | | | | |
|---|---|---|---|---|
| 14.5 | Reset apparent energy* | Yes / No | No | YAH |

**NOTE :** For resetting energy parameters user will be prompted the password. If correct password is entered, the user will be able to reset all energy parameters. This password will be a value which will be greater than the configuration password by 1.
(* = Only for EM306-C-D)

## MODBUS REGISTER ADDRESSES LIST (Only for EM306-C-D)

**Readable Parameters : [ Length (Register) : 2 ;**
**Data Structure : Float ]**

| Address | Hex Address | Parameter |
|---|---|---|
| 30024 | 0x18 | kW1 |
| 30026 | 0x1A | kW2 |
| 30028 | 0x1C | kW3 |
| 30030 | 0x1E | kVA1 |
| 30032 | 0x20 | kVA2 |
| 30034 | 0x22 | kVA3 |
| 30036 | 0x24 | kVAr1 |
| 30038 | 0x26 | kVAr2 |
| 30040 | 0x28 | kVAr3 |
| 30042 | 0x2A | Total kW |
| 30044 | 0x2C | Total kVA |
| 30046 | 0x2E | Total kVAr |
| 30048 | 0x30 | PF1 |
| 30050 | 0x32 | PF2 |
| 30052 | 0x34 | PF3 |
| 30054 | 0x36 | Average PF |
| 30058 | 0x3A | Total kWh |
| 30060 | 0x3C | Total kWh* |
| 30062 | 0x3E | Total kVAh |
| 30064 | 0x40 | Total kVAh* |
| 30066 | 0x42 | Total kVArh |
| 30068 | 0x44 | Total kVArh* |
| 30084 | 0x54 | kWh1 (Imp) |
| 30086 | 0x56 | kWh1 (Imp)* |
| 30088 | 0x58 | kWh2 (Imp) |
| 30090 | 0x5A | kWh2 (Imp)* |
| 30092 | 0x5C | kWh3 (Imp) |
| 30094 | 0x5E | kWh3 (Imp)* |
| 30096 | 0x60 | kWh1 (Exp) |
| 30098 | 0x62 | kWh1 (Exp)* |
| 30100 | 0x64 | kWh2 (Exp) |
| 30102 | 0x68 | kWh2 (Exp)* |
| 30104 | 0x6A | kWh3 (Exp) |
| 30106 | 0x6C | kWh3 (Exp)* |
| 30108 | 0x6E | Total kWh (Imp) |
| 30110 | 0x70 | Total kWh (Imp)* |
| 30112 | 0x72 | Total kWh (Exp) |
| 30114 | 0x74 | Total kWh (Exp)* |
| 30116 | 0x76 | kVArh1 (Imp) |
| 30118 | 0x78 | kVArh1 (Imp)* |
| 30120 | 0x7A | kVArh2 (Imp) |
| 30122 | 0x7C | kVArh2 (Imp)* |

| Address | Hex Address | Parameter |
|---|---|---|
| 30124 | 0x7E | kVArh3 (Imp) |
| 30126 | 0x80 | kVArh3 (Imp)* |
| 30128 | 0x82 | kVArh1 (Exp) |
| 30130 | 0x84 | kv1 (Exp)* |
| 30132 | 0x86 | kVArh2 (Exp) |
| 30134 | 0x88 | kVArh2 (Exp)* |
| 30136 | 0x8A | kVArh3 (Exp) |
| 30138 | 0x8C | kVArh3 (Exp)* |
| 30140 | 0x8E | Total kVArh (Imp) |
| 30142 | 0x90 | Total kVArh (Imp)* |
| 30144 | 0x92 | Total kVArh (Exp) |
| 30146 | 0x94 | Total kVArh (Exp)* |
| 30148 | 0x96 | kVAh1 |
| 30150 | 0x98 | kVAh1* |
| 30152 | 0x9A | kVAh2 |
| 30154 | 0x9C | kVAh2* |
| 30156 | 0x9E | kVAh3 |
| 30158 | 0x110 | kVAh3* |
| 30160 | 0x46 | Total kWh DG |
| 30162 | 0x46 | Total kWh DG* |
| 30164 | 0x46 | Total kVAh DG |
| 30166 | 0x46 | Total kVAh DG* |
| 30168 | 0x46 | Total kVArh DG |
| 30170 | 0x46 | Total kVArh DG* |
| 30172 | 0x46 | Total kWh Mains+DG |
| 30174 | 0x46 | Total kWh Mains+DG* |
| 30176 | 0x46 | Total kVAh Mains+DG |
| 30178 | 0x46 | Total kVAh Mains+DG* |
| 30180 | 0x46 | Total kVArh Mains+DG |
| 30182 | 0x46 | Total kVArh Mains+DG* |
| 30184 | 0x46 | DG Sensing |
| 30684 | 0x46 | Serial no. (Data Structure : Hex) |

**Note:** '*' address are for first 3 digit of energy values. For the energy value greater then 999999 based on CTxPT ratio, concatenate the value of both address of same energy.

**Example:** For Total kWh, Value at 30058 is 7654.32 and value at 30060 is 98. Actual value of Total kWh is 987654.32.

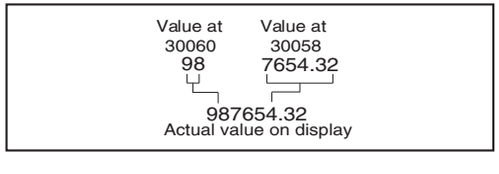


## AUTOMATIC / MANUAL MODE DESCRIPTION

Press✔ key for 5 seconds to toggle between Automatic and Manual mode.
**Note :** By default unit operates in automatic mode.
In automatic mode online pages scroll automatically at the rate of 5 seconds per page.
In automatic mode when any key is pressed, unit temporarily switches to manual mode and the appropriate page is displayed, also if any key is not pressed for 5 sec, unit resumes automatic mode.
**Note: Only For EM306-C-D**

## USER GUIDE

### LED INDICATIONS

- **INT :** The INT LED provides optical output for calibration verification as well as visual indication of energy integration. The pulse rate is 1000 Pulses/kWh.
- **EXP:** EXP LED gives the indication of reversal of one or more CT connections or presence of negative power in any or all phases. In such cases meter may not indicate the correct energy consumption. The CT should be connected to the meter with correct polarities.

## NETWORK SELECTION AND WIRING INPUT

| Network selection in configuration mode | Wiring |
|---|---|
| **3P4W** | 3P4W |
| **3P3W** | 3P3W |
| **1P2W (P1/P2/P3)** | 1P2W (P1/P2/P3) |

**Note :** P1, P2 and P3 are Three Phase.

## MODBUS REGISTER ADDRESSES LIST (Only for EM306-C-D)

**Readable / writable parameters : [Data Structure : Integer]**

| Address | Hex Address | Parameter | Range | | Length (Register) |
|---|---|---|---|---|---|
| 40000 | 0x00 | Password | Min value : 0 | Max value : 9998 | 1 |
| 40001 | 0x01 | N/W Selection | Value : 0 | Meaning : 3P4W | 1 |
| | | | Value : 1 | Meaning : 3P3W | 1 |
| | | | Value : 2 | Meaning : 1P2W-R | 1 |
| | | | Value : 3 | Meaning : 1P2W-Y | 1 |
| | | | Value : 4 | Meaning : 1P2W-B | 1 |
| 40002 | 0x02 | CT Secondary | Min value : 1 | Max value : 5 | 1 |
| 40003 | 0x03 | CT primary (CT Secondary=5) | Min value : 5 | Max value : 10000 | 1 |
| | | CT primary (CT Secondary=1) | Min value : 1 | Max value : 10000 | |
| 40004 | 0x04 | PT Secondary | Min value : 100 | Max value : 500 | 1 |
| 40005 | 0x05 | PT primary | Min value : 100 | Max value : 500kV | 2 |
| 40016 | 0x10 | Auto Resolution | Value : 0 | Meaning : Auto | 1 |
| | | | Value : 1 | Meaning : Count | 1 |
| 40017 | 0x11 | Extended Resolution | Value : 0 | Meaning : OFF | 1 |
| | | | Value : 1 | Meaning : ON | 1 |
| 40007 | 0x07 | Slave id | Min value : 1 | Max value : 255 | 1 |
| 40008 | 0x08 | Baud rate | Value : 0x0000 | Meaning : 300 | 1 |
| | | | Value : 0x0001 | Meaning : 600 | |
| | | | Value : 0x0002 | Meaning : 1200 | |
| | | | Value : 0x0003 | Meaning : 2400 | |
| | | | Value : 0x0004 | Meaning : 4800 | |
| | | | Value : 0x0005 | Meaning : 9600 | |
| | | | Value : 0x0006 | Meaning : 19200 | |
| 40009 | 0x09 | Parity | Value : 0x0000 | Meaning : None | 1 |
| | | | Value : 0x0001 | Meaning : Odd | |
| | | | Value : 0x0002 | Meaning : Even | |
| 40010 | 0x0A | Stop bit | Value : 0x0000 | Meaning : 1 | 1 |
| | | | Value : 0x0001 | Meaning : 2 | |
| 40012 | 0x0C | Factory Default | Value : 1 | Meaning : Set to factory setting range | 1 |
| 40013 | 0x0D | Reset Active Energy | Value : 1 | Meaning : Reset Total Active Energy | 1 |
| 40014 | 0x0F | Reset Apparent Energy | Value : 1 | Meaning : Reset Total Apparent Energy | 1 |
| 40015 | 0x10 | Reset Reactive Energy | Value : 1 | Meaning : Reset Total Reactive Energy | 1 |
| 40042 | 0x2A | Reset Active Energy DG | Value : 1 | Meaning : Reset Total Active Energy of DG | 1 |
| 40043 | 0x2B | Reset Apparent Energy DG | Value : 1 | Meaning : Reset Total Reactive Energy of DG | 1 |
| 40044 | 0x2C | Reset Reactive Energy DG | Value : 1 | Meaning : Reset Total Apparent Energy of DG | 1 |

## CONNECTION DIAGRAM FOR COMMUNICATION

### CONNECTION DIAGRAM FOR COMMUNICATION

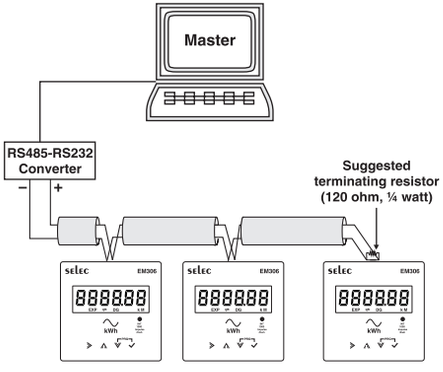


Contact sales for PC based monitoring software to communicate with the meters.

**Note: Only for EM306-C-D**

## APPLICATION OF DIGITAL INPUT

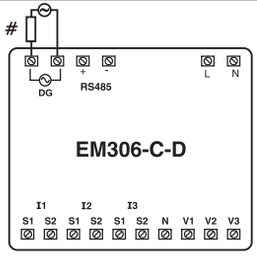


**Note: Only for EM306-C-D**

## APPLICATION OF PULSE OUTPUT

● **ENERGY CONTROLLER**

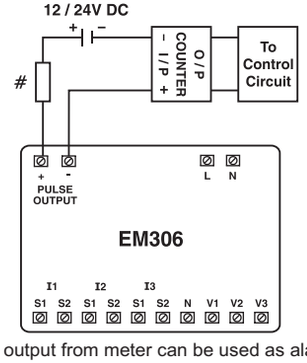


Pulse output from meter can be used as alarm generator or total energy controller by interfacing it with Pre settable counter and control circuits (Contactors, Relay, Trip Circuit).

The counter is loaded with the maximum energy consumption. When count reaches setpoint it provides output to control circuit to take appropriate action.

# All fuse types : 0.5A class CC UL type
0.5A fast acting 600V

**Note: Only for EM306**

## TYPICAL WIRING DIAGRAM

### 3 PHASE 4-WIRE (COMMONLY USED)

**3 Ø - 4 WIRE, 3 CT'S**

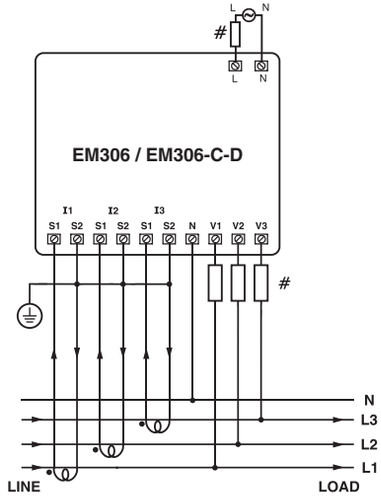


**3 Ø - 4 WIRE, 3 CT'S and 3 PT'S**

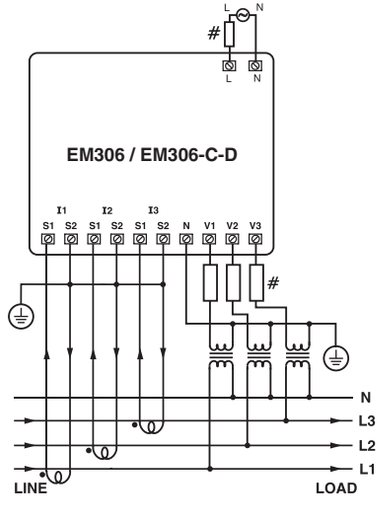


### 3 PHASE 3-WIRE

**3 Ø - 3 WIRE, 2 CT'S**

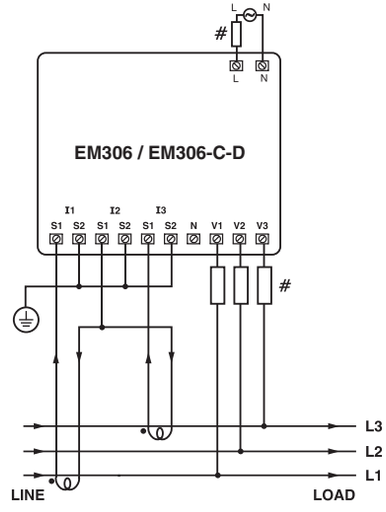


**3 Ø - 3 WIRE, 2 CT'S and 2 PT'S**

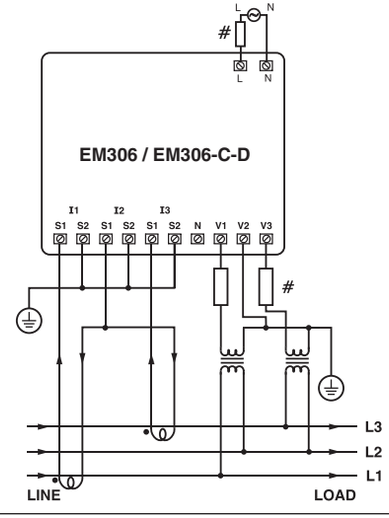


### 1 PHASE - 2 WIRE

**1 Ø - 2 WIRE, 1 CT**

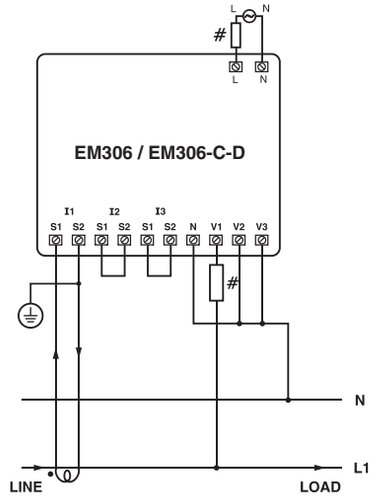


# All fuse types : 0.5A class CC UL type
0.5A fast acting 600V

## LUG DESCRIPTION

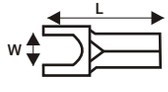


| | |
|---|---|
| 1. Length L (mm) | 11.20 |
| 2. Width W (mm) | 6.35 |

**(NOTE :** to be wired with LUG only**)**

## APPLICATION OF PULSE OUTPUT

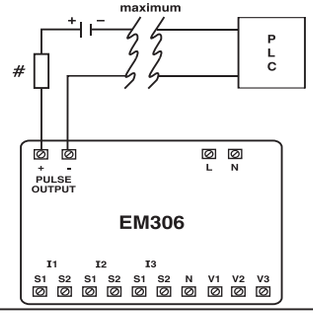


● **PROCESS INTEGRATION**

Pulse output from meter can be interfaced into a process through a PLC for on line control of energy content in the process.

If the PLC has a self excited digital input, External DC supply is not needed

The kWh pulse is also used to device average kWh information at the PLC.

**Note: Only for EM306**

Specifications are subject to change, since development is a continuous process.


**Selec Controls Pvt. Ltd.**

**Factory Address :** EL-27/1, Electronic Zone, TTC Industrial Area, MIDC, Mahape, Navi Mumbai - 400 710, INDIA.
**Website :** www.selec.com
**For Sales & Support,**
**Tel. No. :** +91-22-41 418 469/452
**Mob No. :** +9136977315. **Email :** sales@selec.com
**For Service,**
**Tel. No. :** +91-7498077172 / +91-7400069545
**Email :** service@selec.com