selec

EM306 / EM306-C-D

Operating Instructions

OP1029-V04

SPECIFICATION

DISPLAY
1 Row of 6 Digits to show electrical parameters
7 Segment LED Display 71*24mm
Digital integrated with parameter units

INDICATION
EXP - CT Reverse Detection
k - Kilo
M - Mega
⇄* - Communication in progress
DG * - DG sensing

WIRING INPUT
3Ø - 4 wire, 3Ø - 3 wire, and 1Ø - 2 wire system

RATED INPUT VOLTAGE
11 to 277 VAC (L-N): 19 to 480 VAC (L-L)CATIII
11 to 300 VAC (L-N): 19 to 519 VAC (L-L)CATII
Installation Catagory III

FREQUENCY RANGE
45-65 Hz

RATED INPUT CURRENT
Nominal 5A AC (Min-50mA, Max-6A)

BURDEN
0.5 VA@5A per phase

CT PRIMARY
1A / 5A to 10,000A (Programmable for any value)
Note : 1A to 10,000A if CT secondary is 1 else CT primary is 5A to 10,000A

CT SECONDARY
1A or 5A (programmable)

PT PRIMARY
100V to 500kV (Programmable for any value)

PT SECONDARY
100 to 500V (Programmable for any value)

POWER CONSUMPTION
Less than 8VA

DISPLAY UPDATE TIME *
1 sec for all parameters

DISPLAY SCROLLING *
Automatic or Manual (Programmable)

ENVIRONMENTAL CONDITIONS
- Indoor use
- Altitude of up to 2000 meters
- Pollution degree II

Temperature : Operating : -10°C to 55°C
Storage : -20°C to 75°C
Humidity : Up to 85% non-condensingphase

PROTECTION CLASS : II

INSTALLATION CATAGORY : III

MOUNTING : Panel mounting

WEIGHT : 210gms

OUTPUT (Only for EM306)
Pulse output : Voltage range external 24V DC max
Current capacity : 100mA
Pulse width : 100ms ±5ms

DIGITAL INPUT *
Voltage(L-N): 85 to 276V AC
(Note: * = Only for EM306-C-D)

RESOLUTION

PT Ratio x CT Ratio	kWh	Pulse output kWh/pulse
<15	0.01K	0.01
<150	0.1K	0.1
<1500	1K	1
<15000	0.01M	10
<150000	0.1M	100
≥150000	1M	1000

NOTE
1) Power resolution is automatically adjusted.
2) For power factor, resolution is 0.001.

ORDER CODE INFORMATION

Product	Supply Voltage	Certification	
		CE	cULus LISTED
EM306	85 to 276V AC, 50/60Hz	—	—
EM306-C-D	85 to 276V AC, 50/60Hz	—	—

SERIAL COMMUNICATION (Only for EM306-C-D)

Interface standard and protocol	RS485 and MODBUS RTU
Communication address	1 to 255
Transmission mode	Half duplex
Data types	Float, Integer and Hex
Transmission distance	500m maximum
Transmission Speed	300, 600,1200, 2400, 4800, 9600,19200 (in bps)
Parity	None, Odd, Even
Stop bits	1 or 2

ACCURACY

Measurement	Accuracy
Active Power*	1%
Apparent power*	1%
Reactive Power*	2%
Power factor*	±0.01 Digit
Active energy	Class 1
Reactive energy*	Class 2

(Note: * = Only for EM306-C-D)

SAFETY PRECAUTIONS

All safety related codifications, symbols and instructions that appear in this operating manual or on the equipment must be strictly followed to ensure the safety of the operating personnel as well as the instrument.

If the equipment is not used in a manner specified by the manufacturer it might impair the protection provided by the equipment.

- Do not use the equipment if there is any mechanical damage.
- Ensure that the equipment is supplied with correct voltage.

⚠ CAUTION :

1. Read complete instructions prior to installation and operation of the unit.
2. Risk of electric shock.
3. The equipment in its installed state must not come in close proximity to any heating sources, oils, steam, caustic vapors or other unwanted process by products.

⚠ WARNING :

1. To prevent the risk of electric shock, power supply to the equipment must be kept OFF while doing the wiring arrangement.
2. Wiring shall be done strictly according to the terminal layout. Confirm that all connections are correct.
3. Use lugged terminals.
4. To reduce electromagnetic interference use of wires with adequate ratings and twists of the same in equal size shall be made with shortest connections.
5. Layout of connecting cables shall be away from any internal EMI source.
6. Cable used for connection to power source, must have a cross section of 0.5mm² to 2.5mm² (20 to 14AWG ; 75°C (minimum)). These wires shall have current carrying capacity of 6A.
7. Copper cable should be used. (Stranded or Single core cable).
8. Before attempting work on device, ensure absence of voltages using appropriate voltage detection device.
9. Recommended CT : Measuring type.

INSTALLATION GUIDELINES

⚠ CAUTION :

1. This equipment, being built-in-type, normally becomes a part of main control panel and in such case the terminals do not remain accessible to the end user after installation and internal wiring.
2. Conductors must not come in contact with the internal circuitry of the equipment or else it may lead to a safety hazard that may in turn endanger life or cause electrical shock to the operator.
3. Circuit breaker or mains switch must be installed between power source and supply terminals to facilitate power 'ON' or 'OFF' function. However this switch or breaker must be installed in a convenient position normally accessible to the operator.
4. Before disconnecting the secondary of the external current transformer from the equipment, make sure that the current transformer is short circuited to avoid risk of electrical shock and injury.
5. The equipment shall not be installed in environmental conditions other than those mentioned in this manual.
6. The equipment does not have a built-in-type fuse. Installation of external fuse of rating 275V AC / 0.5Amp for electrical circuitry / battery is highly recommended.

MECHANICAL INSTALLATION

For installing the meter
1. Prepare the panel cutout with proper dimensions as shown below.
2. Push the meter into the panel cutout. Secure the meter in its place by fitting the clamp on the rear side. Fit clamps on both sides in diagonally opposite location for optimum fitting.
3. For proper sealing, tighten the screws evenly with required torque.

Terminal screw tightening torque:
0.68 N-m to 0.79 N-m (6.018 In-Lb to 6.992 In-Lb)
Screw clamp tightening torque : 0.1 N-m (0.885 Lb-inch)

OUTLINE Dimensions (in mm)	PANEL CUTOUT Dimensions (in mm)

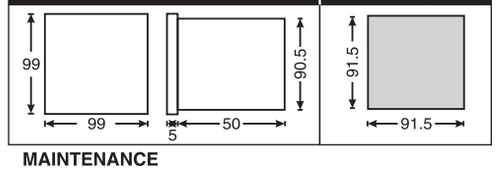

MAINTENANCE
1. The equipment should be cleaned regularly to avoid blockage of ventilating parts.
2. Clean the equipment with a clean dry or damp cloth. Do not use any cleaning agent other than water.

TERMINAL CONNECTIONS

EM306 CONNECTIONS DIAGRAM

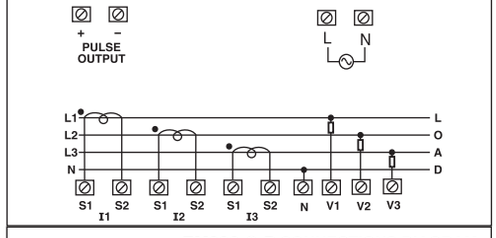

EM306-C-D CONNECTIONS DIAGRAM

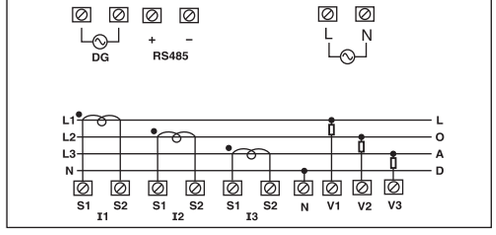

FRONT PANEL DESCRIPTION

ONLINE PAGE DESCRIPTION (Only for EM306)

Display will show only kWh page.

Press "▼"	Display roll-over count of kWh.	0

ONLINE PAGE DESCRIPTION (Only for EM306-C-D)

By default total kWh page will be displayed and after pressing any key,next page of last accessed page will be shown.If no key is pressed for 60 seconds in manual mode,display will go to default page i.e total kWh of mains, & if DG is on, display will go to total kWh of DG.

For 3P4W		
KEY PRESS	**ONLINE PAGE DESCRIPTION**	**DISPLAY**
Press "PF"	**The first screen** : Displays units of R phase power factor for a second, then display value.	PF 1
	The second screen : Displays unit of Y phase power factor for a second, then display value.	PF2
	The third screen : Displays unit of B phase power factor for a second, then display value.	PF3
	The fourth screen : Displays unit of average of all three phase power factor then display value.	PFAVG
	NOTE: 1.For 3Ø 3W system, only 4th screen will be visible. 2.For 1Ø 2W-R system, only 1st screen will be visible. 3.For 1Ø 2W-Y system, only 2nd screen will be visible. 4.For 1Ø 2W-B system, only 3rd screen will be visible.	

For 3P4W		
KEY PRESS	**ONLINE PAGE DESCRIPTION**	**DISPLAY**
Press "P"	**The first screen** : Displays unit of active power of R phase for a second, then displays value.	W 1
	The second screen : Displays unit of active power of Y phase for a second, then display value.	W2
	The third screen : Displays unit of active power of B phase for a second, then display value.	W3
	The fourth screen : Displays unit of total active power for a second, then display value.	Wt
	The fifth screen : Displays unit of active energy of R phase for a second, then display value.	WH 1
	The sixth screen : Displays unit of active energy of Y phase for a second, then display value.	WH2
	The seventh screen : Displays unit of active energy of B phase for a second, then display value.	WH3
	The eighth screen : Displays unit of total active energy of MAINS source for a second, then display value.	n. WHt
	The ninth screen : Displays unit of total active energy of DG source for a second, then display value. DG symbol ON	WHt
	The tenth screen : Displays unit of total active energy of MAINS + DG source for a second, then display value. DG symbol ON.	n. WHt
	NOTE:	

Network	Visible screen
3Ø 3W	4th, 8th, 9th &10th
1Ø 2W-R	1st, 8th, 9th &10th
1Ø 2W-Y	2nd, 8th, 9th &10th
1Ø 2W-B	3rd, 8th, 9th &10th
DG	1st, 2nd, 3rd, 4th, 8th, 9th &10th

Press "Q"	**The first screen** : Displays unit of reactive power of R phase for a second, then display value.	VAr 1
	The second screen : Displays unit of reactive power of Y phase for a second, then display value.	VAr2
	The third screen : Displays unit of reactive power of B phase for a second, then display value.	VAr3
	The fourth screen : Displays unit of total reactive power for a second, then display value.	VArt
	The fifth screen : Displays unit of reactive energy of R phase for a second, then display value.	VArH1
	The sixth screen : Displays unit of reactive energy of Y phase for a second, then display value.	VArH2
	The seventh screen : Displays unit of reactive energy of B phase for a second, then display value.	VArH3
	The eighth screen : Displays unit of total reactive energy of MAINS source for a second, then display value.	n.VArHt
	The ninth screen : Displays unit of total reactive energy of DG source for a second, then display value. DG symbol ON	VArHt
	The tenth screen : Displays unit of total reactive energy of MAINS + DG source for a second, then display value. DG symbol ON.	n.VArHt
	NOTE:	

Network	Visible screen
3Ø 3W	4th, 8th, 9th &10th
1Ø 2W-R	1st, 8th, 9th &10th
1Ø 2W-Y	2nd, 8th, 9th &10th
1Ø 2W-B	3rd, 8th, 9th &10th
DG	1st, 2nd, 3rd, 4th, 8th, 9th &10th

For 3P4W		
KEY PRESS	**ONLINE PAGE DESCRIPTION**	**DISPLAY**
Press "S"	**The first screen** : Displays unit of Apparent power of R phase for a second, then display value.	VA 1
	The second screen : Displays unit of Apparent power of Y phase for a second, then display value.	VA2
	The third screen : Displays unit of Apparent power of B phase for a second, then display value.	VA3
	The fourth screen : Displays unit of total Apparent power for a second, then display value.	VAt
	The fifth screen : Displays unit of Apparent energy of R phase for a second, then display value.	VAH 1
	The sixth screen : Displays unit of Apparent energy of Y phase for a second, then display value.	VAH2
	The seventh screen : Displays unit of Apparent energy of B phase for a second, then display value.	VAH3
	The eighth screen : Displays unit of total Apparent energy of MAINS source for a second, then display value.	n. VAHt
	The ninth screen : Displays unit of total Apparent energy of DG source for a second, then display value. DG symbol ON	VAHt
	The tenth screen : Displays unit of total Apparent energy of MAINS + DG source for a second, then display value. DG symbol ON.	n. VAHt
	NOTE:	

Network	Visible screen
3Ø 3W	4th, 8th, 9th &10th
1Ø 2W-R	1st, 8th, 9th &10th
1Ø 2W-Y	2nd, 8th, 9th &10th
1Ø 2W-B	3rd, 8th, 9th &10th
DG	1st, 2nd, 3rd, 4th, 8th, 9th &10th

Note: Energy value shown based on config selection as given below.

Auto resolution	Extended resolution	Energy Mode
Auto	NA	Auto Resolution
Count	ON	9 digit count
Count	OFF	6 digit count

Auto resolution: Resolution of energy changes based on increasing energy.

9 digit count: Max energy value is 999999999 based on CTxPT ratio.
Energy value shown on 2 different pages account for increased maximum value.

For example: If energy value is 1234567.89 kWh then value on display will be

First Page: r 123

Second Page: 4567.89 K

6 digit count: Max energy value is 999999 based on CTxPT ratio.
Energy value shown on single page.
For example: If energy value is 1234.56 kWh then value on display will be

First Page: 1234.56 K

SERIAL NUMBER DESCRIPTION

Press ▲ key for 10 sec. to display serial number.

Note: When the unit is set to auto resolution or 9 digit count and the energy value exceeds 999999 based on CTxPT ratio, switching to a 6 digit count will result in the truncation of the energy value, erasing any digits beyond 999999.
For Example: In Auto resolution and 9 digit count, if energy value is 1234567.89 kWh, switching to a 6 digit count will truncate energy value to 4567.89 kWh.

CONFIGURATION

Note : Setting should be done by professional after going through this user manual and having understood the application situation.
For the configuration setting mode:

- Use ◀+✔ key for 3 sec to enter and exit from configuration menu.
- Use ◀ key to shift the cursor for next digit and to edit.
  Use ▲ key to increment the configuration value.
  Use ▼ key to decrement the configuration.
- Use ✔ key for save parameter value & go to the next page

Config. page	Function	Range or Selection	Factory Setting	
	Password	0000 to 9998	1000	PASWrd
1	Change Password	No / Yes	No	CNGPWd
1.1	New Password	0000 to 9998		NEWPWd
2	Network Selection	3P4W, 3P3W, 1P2W-R, 1P2W-Y and 1P2W-B	3P4W	NW SEL
3	CT Secondary	1A or 5A	5	Ct SEC
4	CT Primary	1A, 5A to 10,000A	5	Ct PRI
5	PT Secondary	100V to 500V	350	Pt SEC
6	PT primary	100V to 500kV	350	Pt PRI
7	Auto resolution	Auto / Count	Auto	AUtrES
8	Extended resolution	ON / OFF	ON	EXtrES
9	Slave Id*	1 to 255	1	SLVEId
10	Baud Rate*	300, 600, 1200, 2400, 4800, 9600 and 19200 (bps)	9600	bdrAtE
11	Parity*	None, Odd, Even	None	PARIty
12	Stop Bit*	1 or 2	1	StPbIt
13	Factory default	Yes / No	No	dEFALt
14	Reset energy	Yes / No	No	rStENG
14.1	Password	0001 to 9999	1001	PASWrd
14.2	Source Selection*	Source1(Mains) / Source2 (Generator)	Source 1 (Mains)	SOURCE
14.3	Reset active energy	Yes / No	No	WH
14.4	Reset reactive energy*	Yes / No	No	VArH

(* = Only for EM306-C-D)

14.5	Reset apparent energy*	Yes / No	No	YAH

NOTE : For resetting energy parameters user will be prompted the password. If correct password is entered, the user will be able to reset all energy parameters. This password will be a value which will be greater than the configuration password by 1.
(* = Only for EM306-C-D)

MODBUS REGISTER ADDRESSES LIST (Only for EM306-C-D)

Readable Parameters : [Length (Register) : 2 ;
Data Structure : Float]

Address	Hex Address	Parameter
30024	0x18	kW1
30026	0x1A	kW2
30028	0x1C	kW3
30030	0x1E	kVA1
30032	0x20	kVA2
30034	0x22	kVA3
30036	0x24	kVAr1
30038	0x26	kVAr2
30040	0x28	kVAr3
30042	0x2A	Total kW
30044	0x2C	Total kVA
30046	0x2E	Total kVAr
30048	0x30	PF1
30050	0x32	PF2
30052	0x34	PF3
30054	0x36	Average PF
30058	0x3A	Total kWh
30060	0x3C	Total kWh*
30062	0x3E	Total kVAh
30064	0x40	Total kVAh*
30066	0x42	Total kVArh
30068	0x44	Total kVArh*
30084	0x54	kWh1 (Imp)
30086	0x56	kWh1 (Imp)*
30088	0x58	kWh2 (Imp)
30090	0x5A	kWh2 (Imp)*
30092	0x5C	kWh3 (Imp)
30094	0x5E	kWh3 (Imp)*
30096	0x60	kWh1 (Exp)
30098	0x62	kWh1 (Exp)*
30100	0x64	kWh2 (Exp)
30102	0x68	kWh2 (Exp)*
30104	0x6A	kWh3 (Exp)
30106	0x6C	kWh3 (Exp)*
30108	0x6E	Total kWh (Imp)
30110	0x70	Total kWh (Imp)*
30112	0x72	Total kWh (Exp)
30114	0x74	Total kWh (Exp)*
30116	0x76	kVArh1 (Imp)
30118	0x78	kVArh1 (Imp)*
30120	0x7A	kVArh2 (Imp)
30122	0x7C	kVArh2 (Imp)*

Address	Hex Address	Parameter
30124	0x7E	kVArh3 (Imp)
30126	0x80	kVArh3 (Imp)*
30128	0x82	kVArh1 (Exp)
30130	0x84	kv1 (Exp)*
30132	0x86	kVArh2 (Exp)
30134	0x88	kVArh2 (Exp)*
30136	0x8A	kVArh3 (Exp)
30138	0x8C	kVArh3 (Exp)*
30140	0x8E	Total kVArh (Imp)
30142	0x90	Total kVArh (Imp)*
30144	0x92	Total kVArh (Exp)
30146	0x94	Total kVArh (Exp)*
30148	0x96	kVAh1
30150	0x98	kVAh1*
30152	0x9A	kVAh2
30154	0x9C	kVAh2*
30156	0x9E	kVAh3
30158	0x110	kVAh3*
30160	0x46	Total kWh DG
30162	0x46	Total kWh DG*
30164	0x46	Total kVAh DG
30166	0x46	Total kVAh DG*
30168	0x46	Total kVArh DG
30170	0x46	Total kVArh DG*
30172	0x46	Total kWh Mains+DG
30174	0x46	Total kWh Mains+DG*
30176	0x46	Total kVAh Mains+DG
30178	0x46	Total kVAh Mains+DG*
30180	0x46	Total kVArh Mains+DG
30182	0x46	Total kVArh Mains+DG*
30184	0x46	DG Sensing
30684	0x46	Serial no. (Data Structure : Hex)

Note: '*' address are for first 3 digit of energy values. For the energy value greater then 999999 based on CTxPT ratio, concatenate the value of both address of same energy.

Example: For Total kWh, Value at 30058 is 7654.32 and value at 30060 is 98. Actual value of Total kWh is 987654.32.

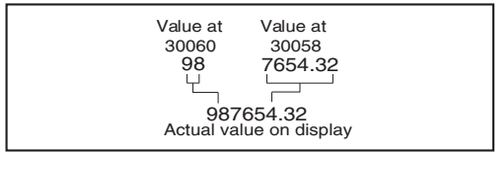

AUTOMATIC / MANUAL MODE DESCRIPTION

Press✔ key for 5 seconds to toggle between Automatic and Manual mode.
Note : By default unit operates in automatic mode.
In automatic mode online pages scroll automatically at the rate of 5 seconds per page.
In automatic mode when any key is pressed, unit temporarily switches to manual mode and the appropriate page is displayed, also if any key is not pressed for 5 sec, unit resumes automatic mode.
Note: Only For EM306-C-D

USER GUIDE

LED INDICATIONS

- **INT :** The INT LED provides optical output for calibration verification as well as visual indication of energy integration. The pulse rate is 1000 Pulses/kWh.
- **EXP:** EXP LED gives the indication of reversal of one or more CT connections or presence of negative power in any or all phases. In such cases meter may not indicate the correct energy consumption. The CT should be connected to the meter with correct polarities.

NETWORK SELECTION AND WIRING INPUT

Network selection in configuration mode	Wiring
3P4W	3P4W
3P3W	3P3W
1P2W (P1/P2/P3)	1P2W (P1/P2/P3)

Note : P1, P2 and P3 are Three Phase.

MODBUS REGISTER ADDRESSES LIST (Only for EM306-C-D)

Readable / writable parameters : [Data Structure : Integer]

Address	Hex Address	Parameter	Range		Length (Register)
40000	0x00	Password	Min value : 0	Max value : 9998	1
40001	0x01	N/W Selection	Value : 0	Meaning : 3P4W	1
			Value : 1	Meaning : 3P3W	1
			Value : 2	Meaning : 1P2W-R	1
			Value : 3	Meaning : 1P2W-Y	1
			Value : 4	Meaning : 1P2W-B	1
40002	0x02	CT Secondary	Min value : 1	Max value : 5	1
40003	0x03	CT primary (CT Secondary=5)	Min value : 5	Max value : 10000	1
		CT primary (CT Secondary=1)	Min value : 1	Max value : 10000	
40004	0x04	PT Secondary	Min value : 100	Max value : 500	1
40005	0x05	PT primary	Min value : 100	Max value : 500kV	2
40016	0x10	Auto Resolution	Value : 0	Meaning : Auto	1
			Value : 1	Meaning : Count	1
40017	0x11	Extended Resolution	Value : 0	Meaning : OFF	1
			Value : 1	Meaning : ON	1
40007	0x07	Slave id	Min value : 1	Max value : 255	1
40008	0x08	Baud rate	Value : 0x0000	Meaning : 300	1
			Value : 0x0001	Meaning : 600	
			Value : 0x0002	Meaning : 1200	
			Value : 0x0003	Meaning : 2400	
			Value : 0x0004	Meaning : 4800	
			Value : 0x0005	Meaning : 9600	
			Value : 0x0006	Meaning : 19200	
40009	0x09	Parity	Value : 0x0000	Meaning : None	1
			Value : 0x0001	Meaning : Odd	
			Value : 0x0002	Meaning : Even	
40010	0x0A	Stop bit	Value : 0x0000	Meaning : 1	1
			Value : 0x0001	Meaning : 2	
40012	0x0C	Factory Default	Value : 1	Meaning : Set to factory setting range	1
40013	0x0D	Reset Active Energy	Value : 1	Meaning : Reset Total Active Energy	1
40014	0x0F	Reset Apparent Energy	Value : 1	Meaning : Reset Total Apparent Energy	1
40015	0x10	Reset Reactive Energy	Value : 1	Meaning : Reset Total Reactive Energy	1
40042	0x2A	Reset Active Energy DG	Value : 1	Meaning : Reset Total Active Energy of DG	1
40043	0x2B	Reset Apparent Energy DG	Value : 1	Meaning : Reset Total Reactive Energy of DG	1
40044	0x2C	Reset Reactive Energy DG	Value : 1	Meaning : Reset Total Apparent Energy of DG	1

CONNECTION DIAGRAM FOR COMMUNICATION

CONNECTION DIAGRAM FOR COMMUNICATION

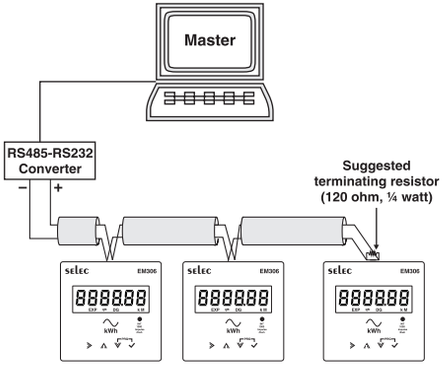

Contact sales for PC based monitoring software to communicate with the meters.

Note: Only for EM306-C-D

APPLICATION OF DIGITAL INPUT

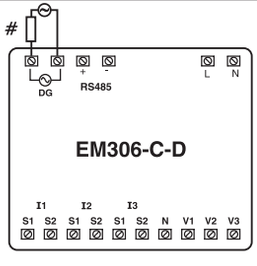

Note: Only for EM306-C-D

APPLICATION OF PULSE OUTPUT

● **ENERGY CONTROLLER**

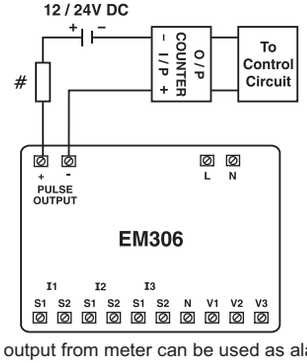

Pulse output from meter can be used as alarm generator or total energy controller by interfacing it with Pre settable counter and control circuits (Contactors, Relay, Trip Circuit).

The counter is loaded with the maximum energy consumption. When count reaches setpoint it provides output to control circuit to take appropriate action.

All fuse types : 0.5A class CC UL type
0.5A fast acting 600V

Note: Only for EM306

TYPICAL WIRING DIAGRAM

3 PHASE 4-WIRE (COMMONLY USED)

3 Ø - 4 WIRE, 3 CT'S

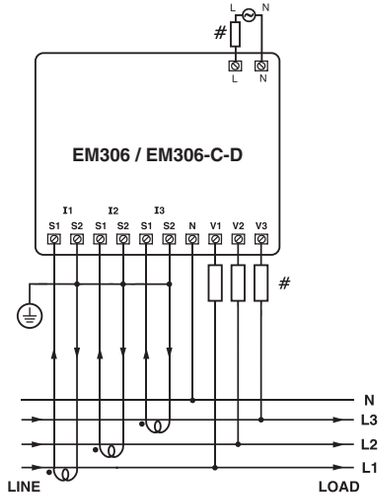

3 Ø - 4 WIRE, 3 CT'S and 3 PT'S

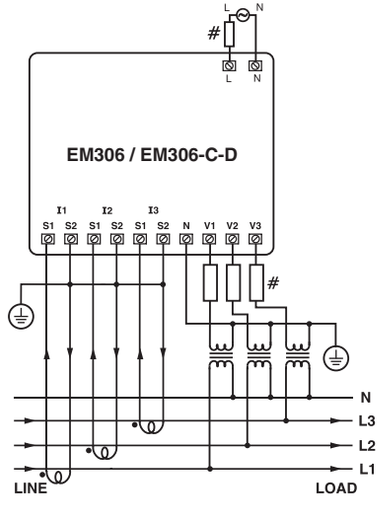

3 PHASE 3-WIRE

3 Ø - 3 WIRE, 2 CT'S

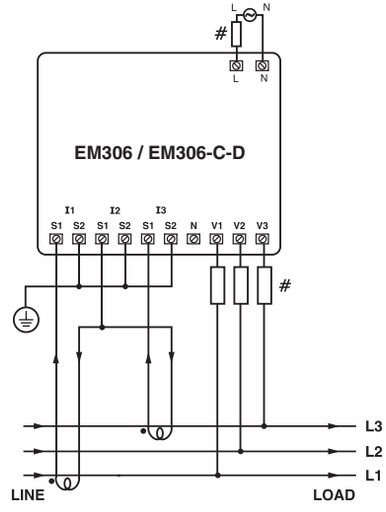

3 Ø - 3 WIRE, 2 CT'S and 2 PT'S

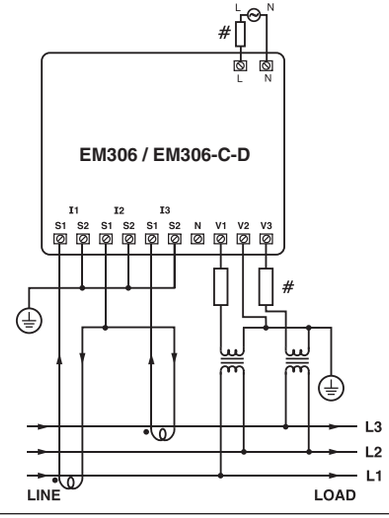

1 PHASE - 2 WIRE

1 Ø - 2 WIRE, 1 CT

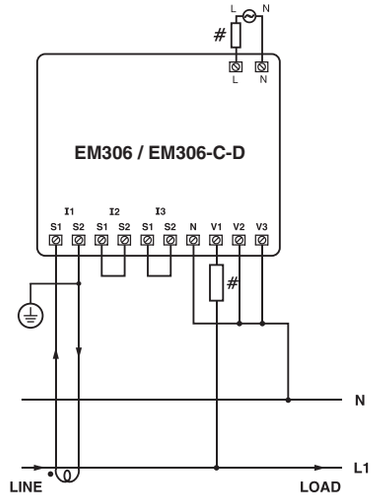

All fuse types : 0.5A class CC UL type
0.5A fast acting 600V

LUG DESCRIPTION

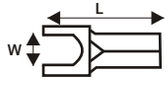

1. Length L (mm)	11.20
2. Width W (mm)	6.35

(NOTE : to be wired with LUG only**)**

APPLICATION OF PULSE OUTPUT

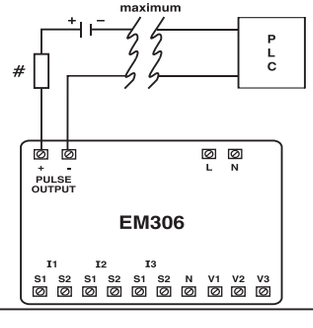

● **PROCESS INTEGRATION**

Pulse output from meter can be interfaced into a process through a PLC for on line control of energy content in the process.

If the PLC has a self excited digital input, External DC supply is not needed

The kWh pulse is also used to device average kWh information at the PLC.

Note: Only for EM306

Specifications are subject to change, since development is a continuous process.

Selec Controls Pvt. Ltd.

Factory Address : EL-27/1, Electronic Zone, TTC Industrial Area, MIDC, Mahape, Navi Mumbai - 400 710, INDIA.
Website : www.selec.com
For Sales & Support,
Tel. No. : +91-22-41 418 469/452
Mob No. : +9136977315. **Email :** sales@selec.com
For Service,
Tel. No. : +91-7498077172 / +91-7400069545
Email : service@selec.com