selec

XT543-N
Operating Instructions

48 x 48

SPECIFICATIONS

Display : 3 digit,height 0.5".
Set Points : Single set point
Delay Modes : On Delay, Interval, Cyclic On first & Cyclic Off first (Configurable by key)
Supply : 90 to 270V AC / DC, 50 / 60 Hz, 5VA max.
Time Ranges : 9.99 / 99.9 / 999sec
9.59 min:sec, 99.9 / 999 min,
9.59 hour:min, 99.9 / 999 hour
(Configurable by key)
Time Setting : By key pad
Accuracy : ± 0.5% or 50 msec, (Whichever is greater)
Start Input : Pulse, Gate (Programmable)
Reset Input : 1)On interruption of power,
2)Front panel reset
(for on delay / Interval only)
3)Terminal reset
Reset Time : Less then 100 msec
Counting Direction : UP/Down
LED Indication : Relay status
Outputs : 2 C/ O (SPDT)
Relay Rating : 5A@250V AC / 30V DC, Resistive
Mounting : Panel mounting
Configuration Lock : Via rear mounting
Temperature : **Operating** : 0 to 50°C
Storage : -20 to 75°C
Humidity : 95% RH
Housing : ABS
Weight : 123.9 gms

TERMINAL CONNECTIONS

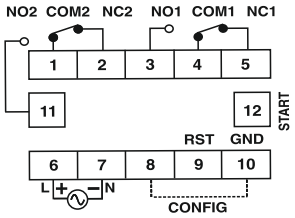

MECHANICAL INSTALLATION

For installing the Timer
1.Prepare the panel cutout with proper dimensions as shown below :

Outline Dimensions (in mm)	Panel cutout Dimensions (in mm)

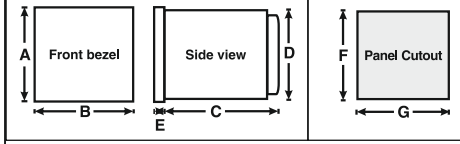

MODELS \ DIM	A	B	C	D	E	F	G
XT543-N	48	48	100	45	7	46	46

2. Remove the clamp from the controller and push the controller into the panel cutout. Insert the clamp from the rear side until the main is securely fit into the panel.

LOAD CONNECTIONS

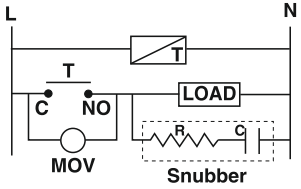

1) Snubber Part No.: APRC - 01.
2) MOV Part No.: AP-MOV - 03.

Note: For including loads, use of snubber and MOV, as shown above, is recommended.

PROGRAMMING SCHEME

CONFIGURATION SCHEME :
1) At power OFF, short terminals for configuration*.
2) Turn power ON.
3) Program configuration setting as per instructions below.

NOTE : LSD dp blink during programming.
*Short terminals 8 & 10 to enter into the configuration mode.

1. TO SELECT RANGE
Default Setting : 9.99sec

KEY PRESS	DISPLAY	DESCRIPTION
RANGE	1 0	9.99sec
PRESS ■ + 🔔	1 1	99.9sec
PRESS ■ + 🔔	1 2	999sec
PRESS ■ + 🔔	1 3	9.59 min:sec
PRESS ■ + 🔔	1 4	99.9min
PRESS ■ + 🔔	1 5	999min
PRESS ■ + 🔔	1 6	9.59 hr:sec
PRESS ■ + 🔔	1 7	99.9hr
PRESS ■ + 🔔	1 8	999hr

(**NOTE**-LSD dp blinks when the timing is in progress)

2. PRESS 🔔 KEY TO SELECT DELAY MODE
Default Setting : On Delay

KEY PRESS	DISPLAY	DESCRIPTION
DELAY MODE	2 0	ON DELAY
PRESS ■ + 🔔	2 1	INTERVAL DELAY
PRESS ■ + 🔔	2 2	CYCLIC (ON FIRST)
PRESS ■ + 🔔	2 3	CYCLIC (OFF FIRST)

3. PRESS 🔔 KEY TO ENABLE / DISABLE FRONT PANEL RESET OPTION
Default Setting : Enabled.

Note: Valid only for On delay / Interval mode.

KEY PRESS	DISPLAY	DESCRIPTION
FRONT PANEL RESET	3 0	ENABLED (YES)
PRESS ■ + 🔔	3 1	DISABLED (NO)

4. PRESS 🔔 KEY TO SELECT START INPUT
Default Setting : Pulse Start.

KEY PRESS	DISPLAY	DESCRIPTION
START INPUT	4 0	GATE START
PRESS ■ + 🔔	4 1	PULSE START

Pulse start: In Pulse start mode, the timing starts on momentary closure of the Start switch.
Gate start: In Gate start mode, when the Start switch is closed, the timing stops and proceeds only after the start switch is released.

5. PRESS 🔔 KEY TO CHANGE DIRECTION
Default Setting:Down

KEY PRESS	DISPLAY	DESCRIPTION
Counting Direction	5 0	Down
PRESS ■ + 🔔	5 1	UP

6. PRESS 🔔 KEY TO RESET ALL PARAMETERS TO DEFAULT VALUE
Note: Reset all function is used only to set all parameter values back to default.

KEY PRESS	DISPLAY	DESCRIPTION
RESET ALL	6 0	NO ACTION
PRESS ■ + 🔔	6 1	NO ACTION
PRESS ■ + 🔔	6 2	NO ACTION
PRESS ■ + 🔔	6 3	NO ACTION
PRESS ■ + 🔔	6 4	NO ACTION
PRESS ■ + 🔔	6 5	NO ACTION
PRESS 🔔	1 0	RESET ALL

AFTER CONFIGURATION SETTING :
1) Turn power OFF.
2) Remove link between the terminals.
3) Turn power ON.

TO PROGRAM SET TIME :

FOR ON DELAY / INTERVAL MODE :
Press ◘ + ♫ / ♥ to program set time.

For Cyclic mode :
ON time - Press ◘ + ♫ / ♥ to program on time

OFF time - To enter programming of off time press ♫ + ♥ for 3sec. When in Off time programming, the LSD dp blinks Then press ◘ + ♫ / ♥ to set off time.

To Exit programming press ♫ + ♥ for 3sec or auto program out after 60sec if no key is pressed.

TO RESET :

For On delay / Interval mode : Press ♫ + ♥ for 0.6sec to reset.

For Cyclic mode : Front reset not valid. Reset only through pulse given From rear terminals.

USER GUIDE

Typical applications of Pulse start & Gate start input:

1. ON Delay with Pulse start input:

i. Terminal connections shall be as per fig. 1
ii. Timing starts on momentary closure of Start switch.
iii. If Start switch is kept closed continuously, the timing will start at every power ON or reset.

XT543-N in ON Delay mode and Pulse start input:
Fig.1 Terminal Connections

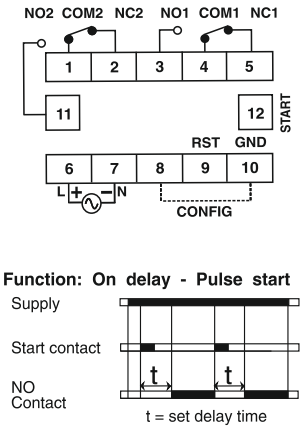

2. ON Delay with Gate start Input:

i. Terminal connections shall be as per fig. 2.
ii. Timing starts at power ON.
iii. When the start switch is closed, the timing is held and it proceeds only after the start switch is released.

XT543-N in ON Delay mode and Gate start input:
Fig.2 Terminal Connections

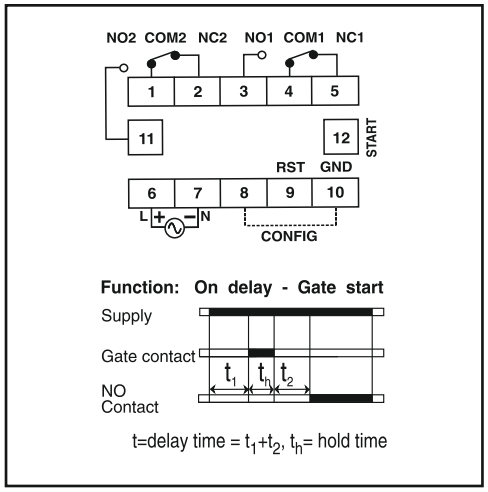

OPERATING MODES

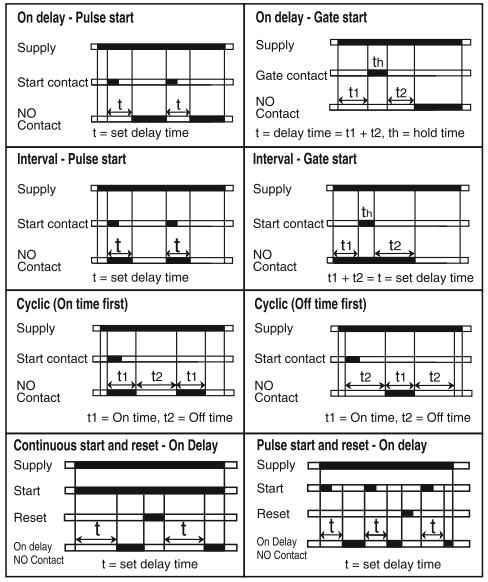

(Specifications are subject to change, since development is a continuous process.)

Selec Controls Pvt. Ltd.

Factory Address : EL-27/1, Electronic Zone, TTC Industrial Area, MIDC, Mahape, Navi Mumbai - 400 710, India.
Website : www.selec.com
For Sales & Support,
Tel. No. : +91-22-41418468 / 452
Mob. No. : +91-9136977315, **Email :** sales@selec.com
For Service,
Tel. No. : +91-7498077172 / +91-7400069545
Email : service@selec.com