## For 3P4W

| KEY PRESS | ONLINE PAGE DESCRIPTION | DISPLAY |
|---|---|---|
| Press "PF" | **The first screen** : Displays units of R phase power factor for a second, then display value. | PF 1 |
| | **The second screen** : Displays unit of Y phase power factor for a second, then display value. | PF2 |
| | **The third screen** : Displays unit of B phase power factor for a second, then display value. | PF3 |
| | **The fourth screen** : Displays unit of average of all three phase power factor then display value. | PFAVG |

k l qb=N¢c-°=PÉ=P t ±·±²£«l=--¬ª·:Q²¦:±¡°££¬=µ§ª= £´{±§ ª£¢
=========O¢c-°=NÉ=O t Jo=±·±²£«l=--¬ª·:N±²=±¡°££¬=µ§ª= £´{±§ ª£¢
=========P¢c-°=NÉ=O t Jv=±·±²£«l=--¬ª·:O¬¢=±¡°££¬=µ§ª= £´{±§ ª£¢
=========Q¢c-°=NÉ=O t J_=±·±²£«l=--¬ª·:P°¢=±¡°££¬=µ§ª= £´{±§ ª£¢

## For 3P4W

| KEY PRESS | ONLINE PAGE DESCRIPTION | DISPLAY |
|---|---|---|
| Press "P" | **The first screen** : Displays unit of active power of R phase for a second, then displays value. | U 1 |
| | **The second screen** : Displays unit of active power of Y phase for a second, then display value. | U2 |
| | **The third screen** : Displays unit of active power of B phase for a second, then display value. | U3 |
| | **The fourth screen** : Displays unit of total active power for a second, then display value. | Ut |
| | **The fifth screen** : Displays unit of active energy of R phase for a second, then display value. | UH 1 |
| | **The sixth screen** : Displays unit of active energy of Y phase for a second, then display value. | UH2 |
| | **The seventh screen** : Displays unit of active energy of B phase for a second, then display value. | UH3 |
| | **The eighth screen** : Displays unit of total active energy of MAINS source for a second, then display value. | n. UHt |
| | **The ninth screen** : Displays unit of total active energy of DG source for a second, then display value. DG symbol ON | UHt |
| | **The tenth screen** : Displays unit of total active energy of MAINS + DG source for a second, then display value. DG symbol ON. | n. UHt |

k l qb=

| k£²µ-°© | s§±§ ª£=±¡°££¬ |
|---|---|
| PÉ=P t | Q²¦l=U²¦l=V²¦=CNM²¦ |
| NÉ=O t Jo | N±²l=U²¦l=V²¦=CNM²¦ |
| NÉ=O t Jv | O¬¢l=U²¦l=V²¦=CNM²¦ |
| NÉ=O t J_ | P°¢l=U²¦l=V²¦=CNM²¦ |
| a d | N±²l=O¬¢l=P°¢l=Q²¦l=U²¦l=V²¦=CNM²¦ |

| KEY PRESS | ONLINE PAGE DESCRIPTION | DISPLAY |
|---|---|---|
| Press "Q" | **The first screen** : Displays unit of reactive power of R phase for a second, then display value. | UAr 1 |
| | **The second screen** : Displays unit of reactive power of Y phase for a second, then display value. | UAr2 |
| | **The third screen** : Displays unit of reactive power of B phase for a second, then display value. | UAr3 |
| | **The fourth screen** : Displays unit of total reactive power for a second, then display value. | Ut |
| | **The fifth screen** : Displays unit of reactive energy of R phase for a second, then display value. | UArH 1 |
| | **The sixth screen** : Displays unit of reactive energy of Y phase for a second, then display value. | UArH2 |
| | **The seventh screen** : Displays unit of reactive energy of B phase for a second, then display value. | UArH3 |
| | **The eighth screen** : Displays unit of total reactive energy of MAINS source for a second, then display value. | n. UArHt |
| | **The ninth screen** : Displays unit of total reactive energy of DG source for a second, then display value. DG symbol ON | UArHt |
| | **The tenth screen** : Displays unit of total reactive energy of MAINS + DG source for a second, then display value. DG symbol ON. | n. UArHt |

k l qb=

| k£²µ-°© | s§±§ ª£=±¡°££¬ |
|---|---|
| PÉ=P t | Q²¦l=U²¦l=V²¦=CNM²¦ |
| NÉ=O t Jo | N±²l=U²¦l=V²¦=CNM²¦ |
| NÉ=O t Jv | O¬¢l=U²¦l=V²¦=CNM²¦ |
| NÉ=O t J_ | P°¢l=U²¦l=V²¦=CNM²¦ |
| a d | N±²l=O¬¢l=P°¢l=Q²¦l=U²¦l=V²¦=CNM²¦ |

| KEY PRESS | ONLINE PAGE DESCRIPTION | DISPLAY |
|---|---|---|
| Press "Q" | **The seventh screen** : Displays unit of reactive energy of B phase for a second, then display value. | UArH3 |
| | **The eighth screen** : Displays unit of total reactive energy of MAINS source for a second, then display value. | n. UArHt |
| | **The ninth screen** : Displays unit of total reactive energy of DG source for a second, then display value. DG symbol ON | UArHt |
| | **The tenth screen** : Displays unit of total reactive energy of MAINS + DG source for a second, then display value. DG symbol ON. | n. UArHt |

k l qb=

| k£²µ-°© | s§±§ ª£=±¡°££¬ |
|---|---|
| PÉ=P t | Q²¦l=U²¦l=V²¦=CNM²¦ |
| NÉ=O t Jo | N±²l=U²¦l=V²¦=CNM²¦ |
| NÉ=O t Jv | O¬¢l=U²¦l=V²¦=CNM²¦ |
| NÉ=O t J_ | P°¢l=U²¦l=V²¦=CNM²¦ |
| a d | N±²l=O¬¢l=P°¢l=Q²¦l=U²¦l=V²¦=CNM²¦ |

| KEY PRESS | ONLINE PAGE DESCRIPTION | DISPLAY |
|---|---|---|
| Press "S" | **The first screen** : Displays unit of Apparent power of R phase for a second, then display value. | UA 1 |
| | **The second screen** : Displays unit of Apparent power of Y phase for a second, then display value. | UA2 |
| | **The third screen** : Displays unit of Apparent power of B phase for a second, then display value. | UA3 |
| | **The fourth screen** : Displays unit of total Apparent power for a second, then display value. | UAt |
| | **The fifth screen** : Displays unit of Apparent energy of R phase for a second, then display value. | UAH 1 |
| | **The sixth screen** : Displays unit of Apparent energy of Y phase for a second, then display value. | UAH2 |
| | **The seventh screen** : Displays unit of Apparent energy of B phase for a second, then display value. | UAH3 |
| | **The eighth screen** : Displays unit of total Apparent energy of MAINS source for a second, then display value. | n. UAHt |
| | **The ninth screen** : Displays unit of total Apparent energy of DG source for a second, then display value. DG symbol ON | UAHt |
| | **The tenth screen** : Displays unit of total Apparent energy of MAINS + DG source for a second, then display value. DG symbol ON. | n. UAHt |

k l qb=

| k£²µ-°© | s§±§ ª£=±¡°££¬ |
|---|---|
| PÉ=P t | Q²¦l=U²¦l=V²¦=CNM²¦ |
| NÉ=O t Jo | N±²l=U²¦l=V²¦=CNM²¦ |
| NÉ=O t Jv | O¬¢l=U²¦l=V²¦=CNM²¦ |
| NÉ=O t J_ | P°¢l=U²¦l=V²¦=CNM²¦ |
| a d | N±²l=O¬¢l=P°¢l=Q²¦l=U²¦l=V²¦=CNM²¦ |

k-²£l=b¬£°¥·:´~ª³£=±¦-µ¬= ~±£¢=-¬=¡-¬§¥=±£³£¡²§-¬=~±=
¥§´£¬= £ª-µ¢

| ^32-=°£±-ª32§-¬ | b¶²£¬£¢=°£±-ª32§-¬ | b¬£°¥·=j-¢£ |
|---|---|---|
| ^32- | k^ | ^32-=o£±-ª32§-¬ |
| `-3¬² | l k | V=¢§¥§²=¡-3¬² |
| `-3¬² | l cc | S=¢§¥§²=¡-3¬² |

^32-=°£±-ª32§-¬l=o£±-ª32§-¬=-=¤=£¬£°¥·=¡¦~¬¥£±= ~±£¢=-¬=
§¬¡°£~±§¬¥=£¬£°¥·¢
V=¢§¥§²=¡-3¬²l=j~¶=£¬£°¥·=´~ª³£=§±=VVVVVVVV= ~±£¢=-¬
`q¶mq=°~²§-¢
b¬£°¥·=´~ª³£=±¦-µ¬=-¬=O=¢§¤£°£¬²=®~¥£±=~¡¡-3¬²=¤-°
§¬¡°£~±£¢=«~¶§«3«=´~ª³£¢

c-°=£¶~«®ª£l=f¤=£¬£°¥·=´~ª³£=§±=NOPQRST¢UV=© t ¦=²¦£¬=
´~ª³£=-¬=¢§±®ª~·=µ§ª= £

c§°±²=m~¥£l=

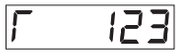


p£¡-¬¢=m~¥£l

h

S=¢§¥§²=¡-3¬²l=j~¶=£¬£°¥·=´~ª³£=§±=VVVVVVV= ~±£¢=-¬
`q¶mq=°~²§-¢
b¬£°¥·=´~ª³£=±¦-µ¬=-¬=±§¬¥ª³£=®~¥£¢
c-°=£¶~«®ª£l=f¤=£¬£°¥·=´~ª³£=§±=NOPQ¢RS=© t ¦=²¦£¬=
´~ª³£=-¬=¢§±®ª~·=µ§ª= £

c§°±²=m~¥£l=

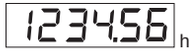


h

## SERIAL NUMBER DESCRIPTION

m°£±±=▲=©£·:¤-°=NM=±£¡¢=²=¢§±®ª~·=±£°§~ª=¬³«£°¢

k-²£l=t¦£¬=²¦£=³¬§²=§±=±£²=²-=~³²-=°£±-ª32§-¬=-°=V=¢§¥§²=¡-3¬²
~¬¢=²¦£=£¬£°¥·=´~ª³£=£¶¡££¢±=VVVVVV= ~±£¢=-¬=`q¶mq=
°~²§-l=±µ§²¡¦§¬¥=²-=~=S=¢§¥§²=¡-3¬²=µ§ª=°£±³²²=§¬=²¦£=²°³¬¡~²§-¬=
-¤=²¦£=£¬£°¥·=´~ª³£l=£°~±§¬¥=~¬·=¢§¥§²=± £·-¬¢=VVVVVV¢
c-°=b¶~«®ª£l=f¬=^32-=°£±-ª32§-¬=~¬¢=V=¢§¥§²=¡-3¬²l=§¤=£¬£°¥·=
´~ª³£=§±=NOPQRST¢UV=© t ¦l=±µ§²¡¦§¬¥=²-=~=S=¢§¥§²=¡-3¬²=µ§ª=
²°³¬¡~²£=£¬£°¥·=´~ª³£=²-=QRST¢UV=© t ¦¢

## CONFIGURATION

**Note :** Setting should be done by professional after going through this user manual and having understood the application situation.

c-°=²¦£=¡-¬¤§¥³°~²§-¬=±£²²§¬¥=«-¢£l

- r ±£◀H▼=©£·:¤-°=P=±£¡²-=£¬²£°=~¬¢=£¶§²=¤°-«
configuration menu.
- Use ◀ key to shift the cursor for next digit and to edit.
Use ▲ key to increment the configuration value.
Use ▼ key to decrement the configuration.
- Use ✔ key for save parameter value & go to the next page

| Config. page | Function | Range or Selection | Factory Setting | |
|---|---|---|---|---|
| | Password | 0000 to 9998 | 1000 | PASUrd |
| 1 | Change Password | No / Yes | No | CnGPUd |
| 1.1 | New Password | 0000 to 9998 | | nEUPUd |
| 2 | Network Selection | 3P4W, 3P3W, 1P2W-R, 1P2W-Y and 1P2W-B | 3P4W | nU SEL |
| 3 | CT Secondary | 1A or 5A | 5 | Ct SEC |
| 4 | CT Primary | 1A, 5A to 10,000A | 5 | Ct PM |
| 5 | PT Secondary | 100V to 500V | 350 | Pt SEC |
| 6 | PT primary | 100V to 500kV | 350 | Pt PM |
| 7 | ^32-=°£±-ª32§-¬ | ^32-=l=`-3¬² | ^32- | AUtrES |
| 8 | b¶²£¬¢£¢=°£±-ª32§-¬ | l k=l=l cc | l k | EEtrES |
| 9 | Slave Id G | 1 to 255 | 1 | SLUEI d |
| 10 | Baud Rate G | 300, 600, 1200, 2400, 4800, 9600 and 19200 (bps) | 9600 | bdrAtE |
| 11 | Parity G | None, Odd, Even | None | PArI tY |
| 12 | Stop Bit G | 1 or 2 | 1 | StPbI t |
| 13 | Factory default | Yes / No | No | dEFALt |
| NQ | Reset energy | Yes / No | No | rStEnG |
| NQ¢N | Password | 0001 to 9999 | 1001 | PASUrd |
| NQ¢O | Source Selection G | Source1(Mains) / Source2 (Generator) | Source 1 (Mains) | SOUrCE |
| NQ¢P | Reset active energy | Yes / No | No | UH |
| NQ¢Q | Reset reactive energy G | Yes / No | No | UArH |

EG=Z=l¬ª·:¤-°=b j PMSJ`JaF

Ea-¡¢=k~«£l=l m=fk pq=b j PMS=|l mNMOVJsMQF==========Em~¥£=O=-¤=QF

| NQ¦R | Reset apparent energyG | Yes / No | No | YAH |
|---|---|---|---|---|

**NOTE :** For resetting energy parameters user will be prompted the password. If correct password is entered, the user will be able to reset all energy parameters. This password will be a value which will be greater than the configuration password by 1.

EG=Z= I ¬ª·:¤-°=b j PMSJ`JaF

## MODBUS REGISTER ADDRESSES LIST=E I ¬ª·:¤-°=b j PMSJ`JaF

**Readable Parameters : [ Length (Register) : 2 ;**
**Data Structure : Float ]**

| Address | Hex Address | Parameter |
|---|---|---|
| 30024 | 0x18 | kW1 |
| 30026 | 0x1A | kW2 |
| 30028 | 0x1C | kW3 |
| 30030 | 0x1E | kVA1 |
| 30032 | 0x20 | kVA2 |
| 30034 | 0x22 | kVA3 |
| 30036 | 0x24 | kVAr1 |
| 30038 | 0x26 | kVAr2 |
| 30040 | 0x28 | kVAr3 |
| 30042 | 0x2A | Total kW |
| 30044 | 0x2C | Total kVA |
| 30046 | 0x2E | Total kVAr |
| 30048 | 0x30 | PF1 |
| 30050 | 0x32 | PF2 |
| 30052 | 0x34 | PF3 |
| 30054 | 0x36 | Average PF |
| PMMRU | M¶P^ | q-²~ª=© t ¦ |
| PMMSM | M¶P` | q-²~ª=© t ¦G |
| PMMSO | M¶Pb | q-²~ª=©s^¦ |
| PMMSQ | M¶QM | q-²~ª=©s^¦G |
| PMMSS | M¶QO | q-²~ª=©s^°¦ |
| PMMSU | M¶QQ | q-²~ª=©s^°¦G |
| PMMUQ | M¶RQ | © t ¦N=Ef«®F |
| PMMUS | M¶RS | © t ¦N=Ef«®FG |
| PMMUU | M¶RU | © t ¦O=Ef«®F |
| PMMVM | M¶R^ | © t ¦O=Ef«®FG |
| PMMVO | M¶R` | © t ¦P=Ef«®F |
| PMMVQ | M¶Rb | © t ¦P=Ef«®FG |
| PMMVS | M¶SM | © t ¦N=Eb¶®F |
| PMMVU | M¶SO | © t ¦N=Eb¶®FG |
| PMNMM | M¶SQ | © t ¦O=Eb¶®F |
| PMNMO | M¶SU | © t ¦O=Eb¶®FG |
| PMNMQ | M¶S^ | © t ¦P=Eb¶®F |
| PMNMS | M¶S` | © t ¦P=Eb¶®FG |
| PMNMU | M¶Sb | q-²~ª=© t ¦=Ef«®F |
| PMNNM | M¶TM | q-²~ª=© t ¦=Ef«®FG |
| PMNNO | M¶TO | q-²~ª=© t ¦=Eb¶®F |
| PMNNQ | M¶TQ | q-²~ª=© t ¦=Eb¶®FG |
| PMNNS | M¶TS | ©s^°¦N=Ef«®F |
| PMNNU | M¶TU | ©s^°¦N=Ef«®FG |
| PMNOM | M¶T^ | ©s^°¦O=Ef«®F |
| PMNOO | M¶T` | ©s^°¦O=Ef«®FG |
| PMNOQ | M¶Tb | ©s^°¦P=Ef«®F |
| PMNOS | M¶UM | ©s^°¦P=Ef«®FG |
| PMNOU | M¶UO | ©s^°¦N=Eb¶®F |
| PMNPM | M¶UQ | ©´N=Eb¶®FG |
| PMNPO | M¶US | ©s^°¦O=Eb¶®F |
| PMNPQ | M¶UU | ©s^°¦O=Eb¶®FG |
| PMNPS | M¶U^ | ©s^°¦P=Eb¶®F |
| PMNPU | M¶U` | ©s^°¦P=Eb¶®FG |
| PMNQM | M¶Ub | q-²~ª=©s^°¦=Ef«®F |
| PMNQO | M¶VM | q-²~ª=©s^°¦=Ef«®FG |
| PMNQQ | M¶VO | q-²~ª=©s^°¦=Eb¶®F |
| PMNQS | M¶VQ | q-²~ª=©s^°¦=Eb¶®FG |
| PMNQU | M¶VS | ©s^¦N |
| PMNRM | M¶VU | ©s^¦NG |
| PMNRO | M¶V^ | ©s^¦O |
| PMNRQ | M¶V` | ©s^¦OG |
| PMNRS | M¶Vb | ©s^¦P |
| PMNRU | M¶NNM | ©s^¦PG |
| PMNSM | M¶QS | q-²~ª=© t ¦=a d |
| PMNSO | M¶QS | q-²~ª=© t ¦=a dG |
| PMNSQ | M¶QS | q-²~ª=©s^¦=a d |
| PMNSS | M¶QS | q-²~ª=©s^¦=a dG |
| PMNSU | M¶QS | q-²~ª=©s^°¦=a d |
| PMNTM | M¶QS | q-²~ª=©s^°¦=a dG |
| PMNTO | M¶QS | q-²~ª=© t ¦= j ~§¬±Ha d |
| PMNTQ | M¶QS | q-²~ª=© t ¦= j ~§¬±Ha dG |
| PMNTS | M¶QS | q-²~ª=©s^¦= j ~§¬±Ha d |
| PMNTU | M¶QS | q-²~ª=©s^¦= j ~§¬±Ha dG |
| PMNUM | M¶QS | q-²~ª=©s^°¦= j ~§¬±Ha d |
| PMNUO | M¶QS | q-²~ª=©s^°¦= j ~§¬±Ha dG |
| PMNUQ | M¶QS | DG Sensing |
| PMSUQ | M¶QS | Serial no. (Data Structure : Hex) |

k -²£W=DGD=~¢¢°£±±=~°£=¤-°=b§°±²=P=¢§¥§²=-¤=£¬£°¥·=´~ª³£±K=
=========c-°=²¦£=£¬£°¥·=´~ª³£=¥°£~²£°=²¦£¬=VVVVVV=
========= ~±£¢=-¬=`q¶mq=°~²§-I=¡-¬¡~²£¬~²£=²¦£=´~ª³£=
=========-¤= -²¦=~¢¢°£±±=-¤=±~«£=£¬£°¥·K
b¶~«®ª£W=c-°=q-²~ª=© t ¦I=s~ª³£=~²=PMMRU=§±=TSRQKPO=
=========~¬¢=´~ª³£=~²=PMMSM=§±=VUK=^¡²³~ª=´~ª³£=-¤=q-²~ª
=========© t ¦=§±=VUTSRQKPOK

s~ª³£=~²= s~ª³£=~²=
=PMMSM =PMMRU
VU TSRQKPO
VUTSRQKPO
^¡²³~ª=´~ª³£=-¬=¢§±®ª~·

## AUTOMATIC / MANUAL MODE DESCRIPTION

Press✔ key for 5 seconds to toggle between Automatic and Manual mode.
**Note :** By default unit operates in automatic mode.
In automatic mode online pages scroll automatically at the rate of 5 seconds per page.
In automatic mode when any key is pressed, unit temporarily switches to manual mode and the appropriate page is displayed, also if any key is not pressed for 5 sec, unit resumes automatic mode.
**k-²£W= I ¬ª·:c-°=b j PMSJ`Ja**

## USER GUIDE

### LED INDICATIONS

- **INT :** The INT LED provides optical output for calibration verification as well as visual indication of energy integration. The pulse rate is 1000 Pulses/kWh.

- bumW=bum=i ba=¥§´£±=²¦£=§¬¢§¡~²§-¬=-¤=°£´£°±~ª=-¤ one or more CT connections or presence of negative power in any or all phases. In such cases meter may not indicate the correct energy consumption. The CT should be connected to the meter with correct polarities.

**kbq t l oh=pb i b`qf l k=^k a= t fofk d=fkm r q**

| Network selection in configuration « -¢£ | t §°§¬¥= |
|---|---|
| PmQ t | PmQ t |
| PmP t | PmP t |
| NmO t =EmNLmOLmPF | NmO t =EmNLmOLmPF |

**Note :** P1, P2 and P3 are Three Phase.

## MODBUS REGISTER ADDRESSES LIST=E I ¬ª·:¤-°=b j PMSJ`JaF

**Readable / writable parameters : [Data Structure : Integer]**

| Address | Hex Address | Parameter | Range | | Length (Register) |
|---|---|---|---|---|---|
| 40000 | 0x00 | Password | Min value : 0 | Max value : 9998 | 1 |
| 40001 | 0x01 | N/W Selection | Value : 0 | Meaning : 3P4W | 1 |
| | | | Value : 1 | Meaning : 3P3W | 1 |
| | | | Value : 2 | Meaning : 1P2W-R | 1 |
| | | | Value : 3 | Meaning : 1P2W-Y | 1 |
| | | | Value : 4 | Meaning : 1P2W-B | 1 |
| 40002 | 0x02 | CT Secondary | Min value : 1 | Max value : 5 | 1 |
| 40003 | 0x03 | CT primary (CT Secondary=5) | Min value : 5 | Max value : 10000 | 1 |
| | | CT primary (CT Secondary=1) | Min value : 1 | Max value : 10000 | |
| 40004 | 0x04 | PT Secondary | Min value : 100 | Max value : 500 | 1 |
| 40005 | 0x05 | PT primary | Min value : 100 | Max value : 500kV | 2 |
| QMMNS | M¶NM | ^³²-:o£±-ª³²§-¬ | s~ª³£=W=M | j £~§¬¥=W=^³²- | 1 |
| | | | s~ª³£=W=N | j £~§¬¥=W=`-³¬² | 1 |
| QMMNT | M¶NN | b¶²£¬¢£¢=o£±-ª³²§-¬ | s~ª³£=W=M | j £~§¬¥=W= I cc | 1 |
| | | | s~ª³£=W=N | j £~§¬¥=W= I k | 1 |
| 40007 | 0x07 | Slave id | Min value : 1 | Max value : 255 | 1 |
| 40008 | 0x08 | Baud rate | Value : 0x0000 | Meaning : 300 | 1 |
| | | | Value : 0x0001 | Meaning : 600 | |
| | | | Value : 0x0002 | Meaning : 1200 | |
| | | | Value : 0x0003 | Meaning : 2400 | |
| | | | Value : 0x0004 | Meaning : 4800 | |
| | | | Value : 0x0005 | Meaning : 9600 | |
| | | | Value : 0x0006 | Meaning : 19200 | |
| 40009 | 0x09 | Parity | Value : 0x0000 | Meaning : None | 1 |
| | | | Value : 0x0001 | Meaning : Odd | |
| | | | Value : 0x0002 | Meaning : Even | |
| 40010 | 0x0A | Stop bit | Value : 0x0000 | Meaning : 1 | 1 |
| | | | Value : 0x0001 | Meaning : 2 | |
| 40012 | 0x0C | Factory Default | Value : 1 | Meaning : Set to factory setting range | 1 |
| 40013 | 0x0D | Reset Active Energy | Value : 1 | Meaning : Reset Total Active Energy | 1 |
| 40014 | 0x0F | Reset Apparent Energy | Value : 1 | Meaning : Reset Total Apparent Energy | 1 |
| 40015 | 0x10 | Reset Reactive Energy | Value : 1 | Meaning : Reset Total Reactive Energy | 1 |
| 40042 | 0x2A | Reset Active Energy DG | Value : 1 | Meaning : Reset Total Active Energy of DG | 1 |
| 40043 | 0x2B | Reset Apparent Energy DG | Value : 1 | Meaning : Reset Total Reactive Energy of DG | 1 |
| 40044 | 0x2C | Reset Reactive Energy DG | Value : 1 | Meaning : Reset Total Apparent Energy of DG | 1 |

## `lkkb`qflk=af^do^j=clo=`lj jrkf`^qflk

### CONNECTION DIAGRAM FOR COMMUNICATION

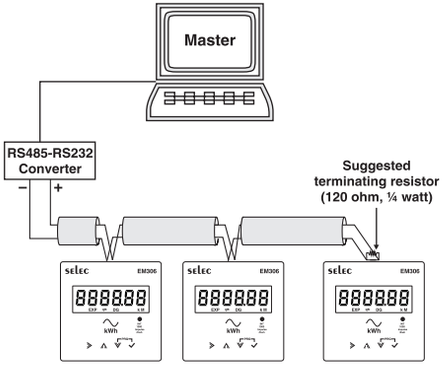


Contact sales for PC based monitoring software to communicate with the meters.

k-²£Ⅲ=l¬ª·=¤-°=b j PMSJ`Ja

## ^mmif`^qflk=lc=afdfq^i=fkmrq

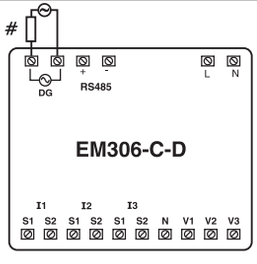


k-²£Ⅲ=l¬ª·=¤-°=b j PMSJ`Ja

## ^mmif`^qflk=lc=mr ipb=lrqmrq

● **ENERGY CONTROLLER**

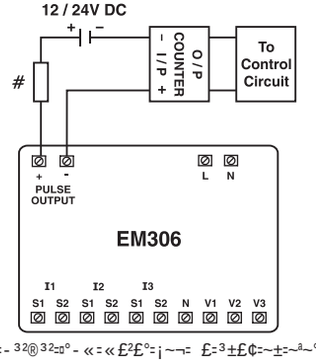


m³ª±£=-³²®³²=¤°-«=«£²£°=¡~¬=£=³±£¢=~±=~ª~°«=¥£¬£°~²-°-°=²-²~ª=£¬£°¥·=¡-¬²°-ªª£°=·=§¬²£°¤~¡§¬¥§=µ§²¦=m°£=±£²~ ª£=counter and control circuits (Contactors, Relay, Trip `§°¡³§²F¦K

= q¦£=¡-³¬²£°=§±=ª-~¢£¢=µ§²¦=²¦£=«~¶§«³«=£¬£°¥·=¡-¬±³«®²§-¬¦= t ¦£¬=¡-³¬²=°£~¡¦£±=±£²®-§¬²=§²=®°-´§¢£±=-³²®³²=²-¡-¬²°-ª=¡§°¡³§²=²-²~©£=~®®°-®°§~²£=~¡²§-¬¦=

# All fuse types : 0.5A class CC UL type
0.5A fast acting 600V

k-²£Ⅲ=l¬ª·=¤-°=b j PMS

## TYPICAL WIRING DIAGRAM

### 3 PHASE 4-WIRE (COMMONLY USED)

**3 Ø - 4 WIRE, 3 CT'S**

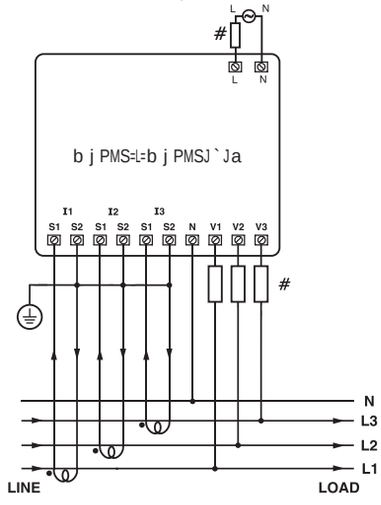


**3 Ø - 4 WIRE, 3 CT'S and 3 PT'S**

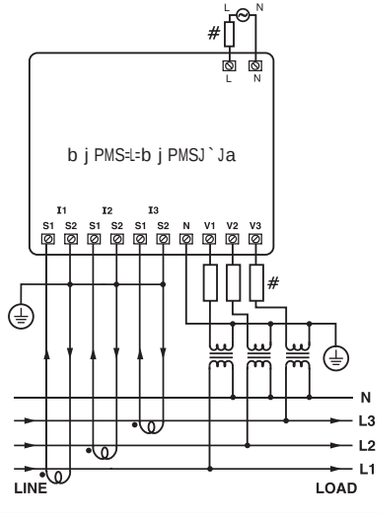


### 3 PHASE 3-WIRE

**3 Ø - 3 WIRE, 2 CT'S**

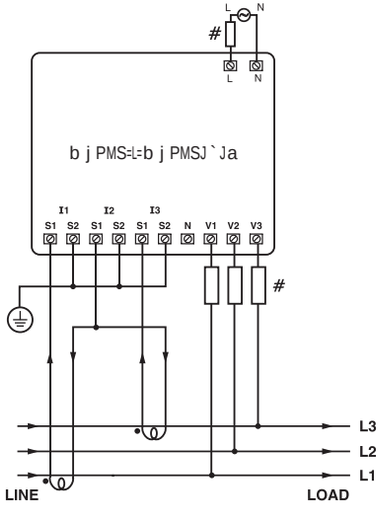


**3 Ø - 3 WIRE, 2 CT'S and 2 PT'S**

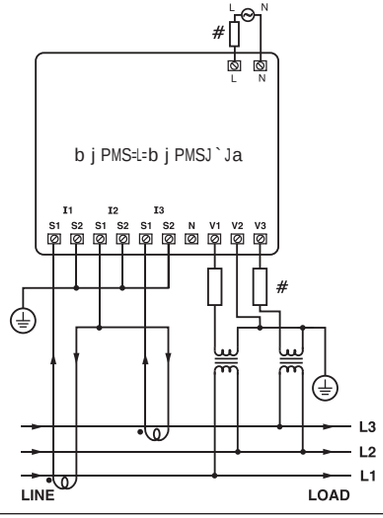


### 1 PHASE - 2 WIRE

**1 Ø - 2 WIRE, 1 CT**

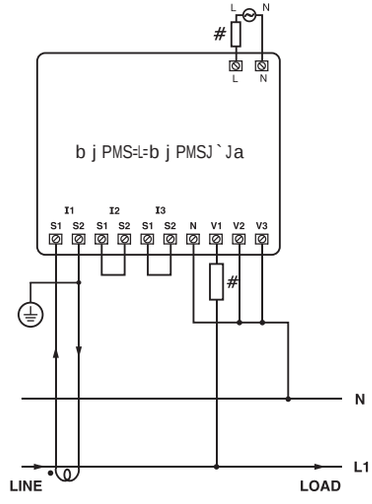


@=^ªª=¤³±£=²·®£±=Ⅲ=MKR^=¡ª~±±=`=ri=²·®£=
==========MKR^=¤~±²=~¡²§¬¥=SMMs

## ird=abp`ofmqflk

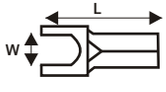


| | |
|---|---|
| 1. Length L (mm) | 11.20 |
| 2. Width W (mm) | 6.35 |

Ek lqb=Ⅲ=²-= £=µ§°£¢=µ§²¦=ird=-¬ª·F

## ^mmif`^qflk=lc=mr ipb=lrqmrq

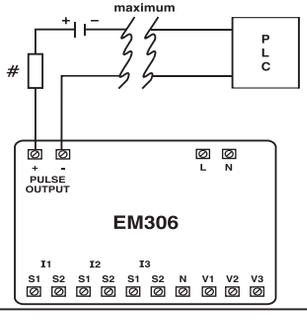


● **mol`bpp=fkqbdo^qflk**

m³ª±£=-³²®³²=¤°-«=«£²£°=¡~¬= £=§¬²£°¤~¡£¢=§¬²-=~=®°-¡£±±=²¦°-³¥¦=~=mi`=¤-°=-¬=ª§¬£=¡-¬²°-ª=-¤=£¬£°¥·=¡-¬²£¬²=§¬=²¦£=®°-¡£±±K

f¤=²¦£=mi`=¦~±=~=±£ª¤=£¶¡§²£¢=¢§¥§²~ª=§¬®³²I=b¶²£°¬~ª=a`=±³®®ª·=§±=¬-²=¬££¢£¢

q¦£=© t ¦=®³ª±£=§±=~ª±-=³±£¢=²-=¢£´§¡£=~´£°~¥£=© t ¦=§¬¤-°«~²§-¬=~²=¦£=mi`K

k-²£Ⅲ=l¬ª·=¤-°=b j PMS

p®£¡§§¡~²§-¬±=~°£=±³ ¨£¡²-²-=¡¦~¬¥£I=±§¬¡£=¢£´£ª-®«£¬²=§±=~=¡-¬²§¬³-³±=®°-¡£±±K

p£ª£¡=`-¬²°-ª±=m´²K=i²¢K


**Factory Address :** EL-27/1, Electronic Zone, TTC Industrial Area, MIDC, Mahape, Navi Mumbai - 400 710, INDIA.
**Website :** www.selec.com
**For Sales & Support,**
**Tel. No. :** +91-22-41 418 469/452
**Mob No. :** +9136977315. **Email :** sales@selec.com
**For Service,**
**Tel. No. :** +91-7498077172 / +91-7400069545
**Email :** service@selec.com