OP421-V01

selec

MRJ385-G-PNW
Operating Instructions

96x96

SPECIFICATIONS

DISPLAY
Liquid crystal display with backlight
4 lines, 4 digits per line to show electrical Parameters
5th line, 8 digits to show energy
Bar graph for current indication as percentage of CT rating

LCD INDICATIONS
- - Integration of energy
- **PRG** - Unit is in configuration menu
- - Communication in progress
- **MAX DMD** - Maximum & Minimum Demand of Power

WIRING INPUT
3 Ø - 4 wire, 1 Ø - 2 wire

RATED INPUT VOLTAGE
100 to 240V AC (L-N) ; 173 to 415V AC (L-L)

FREQUENCY RANGE
45-65 Hz

CT PRIMARY
5A to 10,000A (Programmable for any Value)

CT SECONDARY
330mV

PT PRIMARY
100V to 500kV (Programmable for any value)

PT SECONDARY
173 to 415V AC (L-L)(Programmable for any value)

Display update time
1 sec for all parameters

Display Scrolling
Automatic / Manual

AUXILIARY
Self supplied

INSTALLATION CATEGORY : III

TEMPERATURE
Operating : 0 to 50°C
Storage : -20 to 75°C

HUMIDITY
85% non-condensing

MOUNTING
Panel mounting

WEIGHT
230gms

OUTPUT
Pulse Output : Voltage range : External 24VDC max.
Current capacity : 100 mA max
Pulse Width : Selectable between 0.1s to 2.0s

SERIAL COMMUNICATION

Interface standard & protocol	RS485 & MODBUS RTU
Communication address	1 to 255
Transmission mode	Half duplex
Data types	Float and Integer
Transmission distance	500 Metre maximum
Transmission speed	300, 600,1200, 2400, 4800, 9600,19200 (in bps)
Parity	None, Odd, Even
Stop bits	1 or 2
Response time	100 ms (max and independent of baud rate)

ACCURACY

Measurement	Accuracy
Voltage V_{L-N}	±0.5% of Full scale
Voltage V_{L-L}	±0.5% of Full scale
Current	±0.5% of Full scale
Frequency	±0.1% For L-N Voltage >20V , For L-L Voltage >35V
Active Power	1%
Apparent power	1%
Reactive Power	1%
Power factor	±0.01
Active energy	1%
Reactive energy	1%
Apparent energy	1%
MAX / MIN Active Power	1%
MAX / MIN Reactive Power	1%
MAX Apparent Power	1%

RESOLUTION :

PT Ratio x CT Ratio	kWh / kVAh / kVArh	Pulse
<15	0.01K	0.01K
<150	0.1K	0.1K
<1500	1K	1K
<15000	0.01M	0.01M
<150000	0.1M	0.1M
≥1500000	1M	1M

NOTE : 1) For Voltage, Current, Power, Resolution is automatically adjusted.
2) For power factor, resolution is 0.001
3) blinks after every 5 seconds, if load is connected on at least any one of 3 phases.

RESOLUTION FOR CT RATING :

CT Rating	kWh
160A	0.1K
250A	0.1K
400A	0.1K
800A	1K

SAFETY PRECAUTIONS

All safety related codifications, symbols and instructions that appear in this operating manual or on the equipment must be strictly followed to ensure the safety of the operating personnel as well as the instrument.

If the equipment is not used in a manner specified by the manufacturer it might impair the protection provided by the equipment.

CAUTION
Read complete instructions prior to installation and operation of the unit.

CAUTION : Risk of electric shock.

WIRING GUIDELINES

WARNING:
1. To prevent the risk of electric shock, power supply to the equipment must be kept OFF while installing the wiring.
2. Wiring shall be done strictly according to the terminal layout. Confirm that all connections are correct.
3. Cable used for connection to power source, must have a cross section of 1.5mm². These wires shall have current carrying capacity of 6A.
4. Before attempting work on device, ensure absence of voltages using appropriate voltage detection device.

MAINTENANCE

1. The equipment should be cleaned regularly to avoid blockage of ventilating parts.
2. Clean the equipment with a clean soft cloth.
Do not use Isopropyl alcohol or any other cleaning agent.

INSTALLATION GUIDELINES

CAUTION :
1. This equipment, being of a built-in-type, normally becomes a part of a main control panel and in such case the terminals do not remain accessible to the end user after installation and internal wiring.
2. Conductors must not come in contact with the internal circuitry of the equipment or it may lead to a safety hazard that may in turn endanger life or cause electrical shock to the operator.
3. Protection & disconnection means must be installed between power source and supply terminals to facilitate power 'ON' or 'OFF' function & must be installed in a convenient position normally accessible to the operator.

CAUTION :
The equipment shall not be installed in environmental conditions other than those mentioned in this manual.

MECHANICAL INSTALLATION

For installing the meter
1. Prepare the panel cutout with dimensions as shown below :

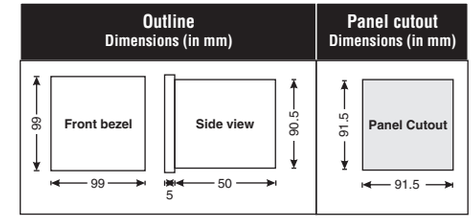

2. Push the meter into the panel cutout. Secure the meter in its place by fitting the clamp from the rear side. Fit clamps on both sides in diagonally opposite location for optimum fitting.
3. For proper sealing, tighten the screws evenly with required torque.
4. Recommended conductor cross section = 1.5mm²
Screw clamp tightening torque = 0.1N-m

CAUTION:
The equipment in its installed state must not come in close proximity to any heating sources, caustic vapors, oil, steam, or other unwanted process by-products.

EMC Guidelines:
1. Use input power cables with shortest connections.
2. Layout of connecting cables shall be away from any internal EMI source.

TERMINAL CONNECTIONS

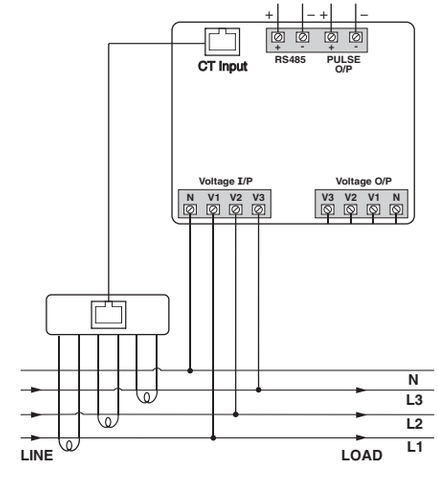

FRONT PANEL DESCRIPTION

ONLINE PAGE DESCRIPTION

There are 6 dedicated keys labelled as V, I, VAF, PF, P, E. Use these 6 keys to read meter parameters. Simply press these keys to read the parameters.

KEY PRESS	ONLINE PAGE DESCRIPTION
Press "V"	**The first screen (Page 1)** : Displays line to neutral voltage of three phase and average line to neutral voltage. **The second screen (Page 2)** : Displays line to line voltage of three phase and average line to line voltage. **The third screen (Page 3)** : Displays percentage harmonics of line to neutral voltage of three phase and average percentage harmonic of line to neutral voltage. **The fourth screen (Page 4)** : Displays percentage harmonics of line to line voltage of three phase and average percentage harmonic of line to line voltage. **The fifth screen** : Press for 3 sec, Displays phase sequence detection. **Note :** In 1 Ø 2W system only first, third and fifth page will be available of selected phase.
Press "I"	**The first screen (Page 5)** : Displays phase current of three phase and neutral current. **The second screen (Page 6)** : Displays phase maximum current demand of three phase and average current. **The third screen (Page 7)** : Displays percentage harmonic of current of three phase and average percentage harmonic of current. **The fourth screen** : Press for 3 sec, Displays current correction indication page.
Press "VAF"	**The first screen (Page 8) :** Displays voltage, current, power factor of first phase and frequency. **The second screen (Page 9) :** Displays voltage, current, power factor of second phase and frequency. **The third screen (Page 10) :** Displays voltage, current, power factor of third phase and frequency. **The fourth screen (Page 11) :** Displays average value of voltage, current and power factor of three phases and frequency. **Note** : In 1 Ø 2W system only one screen will be available of selected phase.
Press "PF"	**The first screen (Page 12) :** Displays power factor of three phase and average power factor.
Press "P"	**The first screen (Page 13) :** Displays active power of three phase and total active power. **The second screen (Page 14) :** Displays reactive power of three phase and total reactive power.

KEY PRESS	ONLINE PAGE DESCRIPTION
Press "P"	**The third screen (Page 15) :** Displays apparent power of three phase and total apparent power. **The fourth screen (Page 16) :** Displays active, reactive, apparent power and power factor of first phase. **The fifth screen (Page 17) :** Displays active, reactive, apparent power and power factor of second phase. **The sixth screen (Page 18) :** Displays active, reactive, apparent power and power factor of third phase. **The seventh screen (Page 19) :** Displays total active, reactive, apparent power and average power factor of three phase. **The eighth screen (Page 20) :** Displays maximum active power demand, reactive power demand and apparent power demand. **The ninth screen (Page 21) :** Displays minimum active power demand and reactive power demand. **Note** : In 1 Ø 2W system only first, second, third, eighth and ninth screen will be available also for 1 Ø 2 W-P1 fourth, 1 Ø 2 W-P2 fifth and 1 Ø 2 W-P3 sixth page will be available.
Press "E"	**The first Screen :** Displays import active energy of first phase. **The second screen :** Displays import active energy of second phase. **The third screen :** Displays import active energy of third phase. **The fourth screen :** Displays export active energy of first phase. **The fifth screen :** Displays export active energy of second phase. **The sixth screen :** Displays export active energy of third phase. **The seventh screen :** Displays total import active energy of three phase. **The eighth screen :** Displays total export active energy of three phase. **The ninth screen :** Displays total net active energy of three phase. **The tenth Screen :** Displays import reactive energy of first phase. **The eleventh screen :** Displays import reactive energy of second phase. **The twelveth screen :** Displays import reactive energy of third phase. **The thirteen screen :** Displays export reactive energy of first phase. **The fourteen screen :** Displays export reactive energy of second phase. **The fifteen screen :** Displays export reactive energy of third phase. **The sixteen screen :** Displays total import reactive energy of three phase. **The seventeen screen :** Displays total export reactive energy of three phase. **The eighteen screen :** Displays total net reactive energy of three phase. **The nineteen screen :** Displays apparent energy of first phase. **The twenty screen :** Displays apparent energy of second phase. **The twenty first screen :** Displays apparent energy of third phase. **The twenty second screen :** Displays total net apparent energy of three phase. **The twenty third screen :** Displays run hour.

Note : For 1 Ø 2W network, all page will be same as 3 Ø 4W only selected phase parameter will display.

AUTOMATIC / MANUAL MODE DESCRIPTION

Press E (↵) button for 3 seconds to toggle between Automatic and Manual mode.
Note : By default unit operates in automatic mode.
In automatic mode online pages scroll automatically at the rate of 5 seconds per page.
In automatic mode when any key is pressed, unit temporarily switches to manual mode and the appropriate page is displayed, also if no key is pressed for 5 sec, unit resumes automatic mode.

SERIAL NUMBER DESCRIPTION

Press PF (▲) key for 10sec. to display 8 digit serial number only for 10sec. at 5th line of display

CONFIGURATION

There are 6 dedicated keys with symbols marked as ◀, ▶, ▼, ▲, ←, ↵ use these 6 keys to enter into configuration menu / change setting.

Note : The settings should be done by a professional, after going through this users manual and after having understood the application situation.
For the configuration setting mode :

- Use ▲ + ▼ keys for 3 sec to enter or exit from the configuration menu.
- Use ◀ or ▶ keys to move curser left or right by one digit each time.
- Use ▲ or ▼ keys for increasing or decreasing parameters value.
- Use ← key to go back to previous page.
- Use ↵ key to save the setting and move on to next page.

Config. page.	Function	Range or Selection	Factory Setting
	Password	0000 to 9998	1000
1	Change Password	No / Yes	No
1.1	New Password	0000 to 9998	1000
2	Network Selection	3P4W, 1P2W-P1, 1P2W-P2, 1P2W-P3	3P4W
3	CT Secondary	Preset	5
4	CT Primary	5A to 10,000A (10.0kA)	160
5	PT Secondary	173V to 415V	350
6	PT primary	100V to 500kV	350
7	Slave Id	1 to 255	1
8	Baud Rate	300, 600, 1200, 2400, 4800, 9600 and 19200	9600
9	Parity	None, Even, Odd	None
10	Stop Bit	1 or 2	1
11	Back Light	0 to 7200 sec.	0000
12	Demand interval method	Sliding / Fixed	Sliding
13	Demand interval duration	1 to 30	15
14	Demand interval length	1 to 30 min	1
15	Max Page Auto	1 to 21	21
16	Change Page Sequence	No / Yes	No

Config page.	Function	Range or Selection	Factory Setting
16.01	Page sequence 1	Page 1 to 21	1
16.02	Page sequence 2	Page 1 to 21	2
16.03	Page sequence 3	Page 1 to 21	3
16.04	Page sequence 4	Page 1 to 21	4
16.05	Page sequence 5	Page 1 to 21	5
16.06	Page sequence 6	Page 1 to 21	6
16.07	Page sequence 7	Page 1 to 21	7
16.08	Page sequence 8	Page 1 to 21	8
16.09	Page sequence 9	Page 1 to 21	9
16.10	Page sequence 10	Page 1 to 21	10
16.11	Page sequence 11	Page 1 to 21	11
16.12	Page sequence 12	Page 1 to 21	12
16.13	Page sequence 13	Page 1 to 21	13
16.14	Page sequence 14	Page 1 to 21	14
16.15	Page sequence 15	Page 1 to 21	15
16.16	Page sequence 16	Page 1 to 21	16
16.17	Page sequence 17	Page 1 to 21	17
16.18	Page sequence 18	Page 1 to 21	18
16.19	Page sequence 19	Page 1 to 21	19
16.20	Page sequence 20	Page 1 to 21	20
16.21	Page sequence 21	Page 1 to 21	21
17	Pulse Length	00.01 to 99.99	0.10
18	Pulse duration	0.1 to 2.0	0.1
19	Factory Default	No / Yes	NO
20	Reset Energy and Max Demand	No / Yes	NO
•20.1	Password	0001 To 9999	1001
20.01	Reset Active Energy	No / Yes	NO
20.02	Reset Reactive Energy	No / Yes	NO
20.03	Reset Apparent Energy	No / Yes	NO
20.04	Reset Max Power	No / Yes	NO
20.05	Reset Run Hour	No / Yes	NO

- For resetting energy parameters user will be prompted for password. If correct password is entered, the user will be able to reset all energy parameters. This password will be value which will be greater than the configuration password by 1.

MODBUS REGISTER ADDRESSES LIST

Readable Parameters : [Length (Register) : 2 ; Data Structure : Float]

Address	Hex Address	Parameter
30000	0x00	Voltage V1N
30002	0x02	Voltage V2N
30004	0x04	Voltage V3N
30006	0x06	Average Voltage LN
30008	0x08	Voltage V12
30010	0x0A	Voltage V23
30012	0x0C	Voltage V31
30014	0x0E	Average Voltage LL
30016	0x10	Current I1
30018	0x12	Current I2
30020	0x14	Current I3
30022	0x16	Average Current
30024	0x18	kW1
30026	0x1A	kW2
30028	0x1C	kW3
30030	0x1E	kVA1
30032	0x20	kVA2
30034	0x22	kVA3
30036	0x24	kVAr1
30038	0x26	kVAr2
30040	0x28	kVAr3
30042	0x2A	Total KW
30044	0x2C	Total KVA
30046	0x2E	Total KVAr
30048	0x30	PF1
30050	0x32	PF2
30052	0x34	PF3
30054	0x36	Average PF
30056	0x38	Frequency
30058	0x3A	Total net kWh
30060	0x3C	Total net kVAh
30062	0x3E	Total net kVArh
30064	0x40	kW Max Active Power
30066	0x42	kW Min Active Power
30068	0x44	kVAr Max Reactive Power
30070	0x46	kVAr Min Reactive Power
30072	0x48	kVA Max Apparent Power
30074	0x4A	MAX I1 Demand
30076	0x4C	MAX I2 Demand
30078	0x4E	MAX I3 Demand
30080	0x50	MAX Avg Demand

Address	Hex Address	Parameter
30082	0x52	Run hour
30084	0x54	kWh1 (Imp)
30086	0x56	kWh2 (Imp)
30088	0x58	kWh3 (Imp)
30090	0x5A	kWh1 (Exp)
30092	0x5C	kWh2 (Exp)
30094	0x5E	kWh3 (Exp)
30096	0x60	Total kWh (Imp)
30098	0x62	Total kWh (Exp)
30100	0x64	kVArh1 (Imp)
30102	0x66	kVArh2 (Imp)
30104	0x68	kVArh3 (Imp)
30106	0x6A	kVArh1 (Exp)
30108	0x6C	kVArh2 (Exp)
30110	0x6E	kVArh3 (Exp)
30112	0x70	Total kVArh (Imp)
30114	0x72	Total kVArh (Exp)
30116	0x74	kVAh1
30118	0x76	kVAh2
30120	0x78	kVAh3
30122	0x7A	Neutral Current
30124	0x7C	THD of 1st Phase Voltage
30126	0x7E	THD of 2nd Phase Voltage
30128	0x80	THD of 3rd Phase Voltage
30130	0x82	THD of Voltage V12
30132	0x84	THD of Voltage V23
30134	0x88	THD of Voltage V31
30136	0x8A	THD of Current I1
30138	0x8C	THD of Current I2
30140	0x8E	THD of Current I3
30684	0x2AC	Serial no. (Data Structure : Hex)
30700	0x2BC	Phase Sequence Indication
30702	0x2BE	Existing KW MAX Active Power
30704	0x2C0	Existing KW MIN Active Power
30706	0x2C2	Existing KVAr MAX Reactive Power
30708	0x2C4	Existing KVAr MIN Reactive Power
30710	0x2C6	Existing KVA MAX Apparent Power
30712	0x2C8	Existing MAX I1 Demand
30714	0x2CA	Existing MAX I2 Demand
30716	0x2CC	Existing MAX I3 Demand
30718	0x2CE	Existing MAX Avg. I Demand

Formula to find address of individual Harmonic

Constant Parameter	Meaning
0	Voltage V1N
1	Voltage V2N
2	Voltage V3N
3	Voltage V12
4	Voltage V23
5	Voltage V31
6	Current I1
7	Current I2
8	Current I3

{143 + [(Harmonic no-2) x 2] + 60 x Constant Parameter}

For Example,

To find the 14th Harmonic address of Voltage V31 following formula can be used :

Formula with the parameter :
{143 + [(Harmonic no-2) x 2] + 60 x C P}
Eg. {143 + [(14-2) x 2] + 60 x 5} = 467

So, Check the 14th Harmonic of Voltage V31 at 467 address.

Readable / writable parameters : [Data Structure : Integer]

Address	Hex Address	Parameter	Range		Length (Register)
			Min value	**Max value**	
40000	0x00	Password	0	9998	1
			Value	**Meaning**	
40001	0x01	N/W Selection	0x0000	3P4W	1
			0x0002	1P2W-P1	1
			0x0003	1P2W-P2	1
			0x0004	1P2W-P3	1
			Min value	**Max value**	
40002	0x02	CT Secondary (Readable Only)	5	5	1
40003	0x03	CT primary	5	10000	1
40004	0x04	PT Secondary	173	415	1
40005	0x05	PT primary	100	500kV	2
			Value	**Meaning**	
40007	0x07	Slave id	1	255	1
40008	0x08	Baud rate	0x0000	300	1
			0x0001	600	
			0x0002	1200	
			0x0003	2400	
			0x0004	4800	
			0x0005	9600	
			0x0006	19200	
40009	0x09	Parity	0x0000	None	1
			0x0001	Odd	
			0x0002	Even	
40010	0x0A	Stop bit	0x0000	1	1
			0x0001	2	1
			Min value	**Max value**	
40011	0x0B	Backlight OFF	0	7200	1
40012	0x0C	Factory Default	1	Set to factory setting range	1
40016	0x10	Auto Mode Pages	Min Value : 1	Max Value : 21	

MODBUS REGISTER ADDRESSES LIST

MODBUS register addresses list continued

Readable / writable parameters : [Data Structure : Integer]

Address	Hex Address	Parameter	Range		Length (Register)
			Page No	**Meaning**	
40017	0x11	Page Address Sequence	1-21	1-First Page ; 21-Last Page	1
40018	0x12	Page Address Sequence	1-21	1-First Page ; 21-Last Page	1
40019	0x13	Page Address Sequence	1-21	1-First Page ; 21-Last Page	1
40020	0x14	Page Address Sequence	1-21	1-First Page ; 21-Last Page	1
40021	0x15	Page Address Sequence	1-21	1-First Page ; 21-Last Page	1
40022	0x16	Page Address Sequence	1-21	1-First Page ; 21-Last Page	1
40023	0x17	Page Address Sequence	1-21	1-First Page ; 21-Last Page	1
40024	0x18	Page Address Sequence	1-21	1-First Page ; 21-Last Page	1
40025	0x19	Page Address Sequence	1-21	1-First Page ; 21-Last Page	1
40026	0x1A	Page Address Sequence	1-21	1-First Page ; 21-Last Page	1
40027	0x1B	Page Address Sequence	1-21	1-First Page ; 21-Last Page	1
40028	0x1C	Page Address Sequence	1-21	1-First Page ; 21-Last Page	1
40029	0x1D	Page Address Sequence	1-21	1-First Page ; 21-Last Page	1
40030	0x1E	Page Address Sequence	1-21	1-First Page ; 21-Last Page	1
40031	0x1F	Page Address Sequence	1-21	1-First Page ; 21-Last Page	1
40032	0x20	Page Address Sequence	1-21	1-First Page ; 21-Last Page	1
40033	0x21	Page Address Sequence	1-21	1-First Page ; 21-Last Page	1
40054	0x36	Page Address Sequence	1-21	1-First Page ; 21-Last Page	1
40055	0x37	Page Address Sequence	1-21	1-First Page ; 21-Last Page	1
40059	0x3B	Page Address Sequence	1-21	1-First Page ; 21-Last Page	1
40060	0x3C	Page Address Sequence	1-21	1-First Page ; 21-Last Page	1
			Value	**Meaning**	
40034	0x22	Demand Interval Method	0X0000	Sliding	1
			0X0001	Fixed	
40035	0x23	Demand Interval Duration	MIN Value : 1	MAX Value : 30	1
40036	0x24	Demand Interval Length	MIN Value : 1	MAX Value : 30	1
40043	0x2B	Reset Max	1	Reset all Max power	1
40044	0x2C	Reset Energy	1	Reset all energy to factory setting range	1
40045	0x2D	Reset Run Hour	1	Reset Run hour	1
			Min value	**Max value**	
40057	0x39	Pulse Duration	0.1(sec)	2.0(sec)	1
40058	0x3A	Pulse Weight	00.10	99.99	1
			Value	**Meaning**	
40063	0x3F	Reset Max Current	1	Reset Max Current	1

APPLICATION OF PULSE OUTPUT

● **PROCESS INTEGRATION**

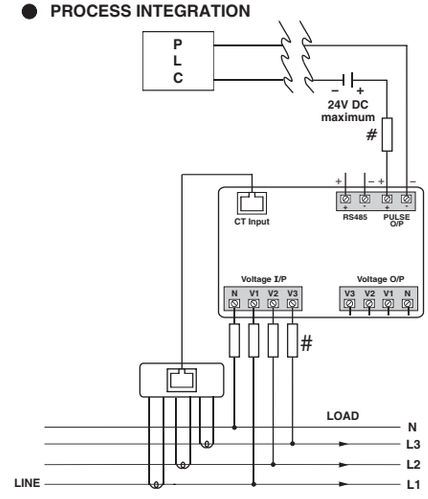

Pulse output from MRJ385-G-PNW meter can be interfaced into a process through a PLC for on line control of energy content in the process.
If the PLC has a self excited digital input, external DC supply is not needed.
The kWh pulse is also used to derive average kWh information at the PLC.

All fuse types : 0.5A class CC UL type
0.5A fast acting 600V

LEFT HAND CT MOUNTING PHASE CORRECTION

The meter phases L1, L2 & L3 are setup as default for the CT to be mounted as an incomer or on the RHside of the board.
Meter display shows rH when "I" is pressed for 3 seconds.
When the CT is mounted on the LH side of the board the phase sequence needs to be reversed.

1. Press "I" for 3 seconds, then release and then press again for 3 seconds. Phase will be reversed and display will show LH
2. Wait 5 seconds for meter to resume online reading. Meter display shows LH when "I" is pressed for 3 seconds.

Meter / CT Ratio Setup -

the meter default CT setting is 160A. to set the meter to other CT sizes follow instructions below.

1. Press ▼ and ▲ keys together for 3 seconds to enter configuration menu.
2. To enter default password 1000 - Press ◀ then press ▲. Press ↵ 4 times to move on and to enter CT primary page 04.
3. Press ◀ or ▶ to select the digit to change and press ▲ or ▼ to raise or lower the CT value. Set to 250, 400 or 800 to match CT.
4. Press ↵ to save settings and move on.
5. Press ▼ and ▲ keys together for 3 seconds to exit configuration menu.

Specifications subject to change as development is a continuous process.

Selec Controls Pvt. Ltd., India

Tel. No. : +91-22-28476443 / 1882
Fax No. : +91-22-28471733 I Toll free : 1800 227 353
Website: www.selec.com I Email: sales@selec.com