APFC346

Power Factor Controller

PRELIMINARY DATASHEET

96 x 96mm

Features :

- Single row, 4 digit , Liquid Crystal Display with Backlight
- 1 CT sensing, intelligent switching sequence
- ALM for over current & over temperature
- Up to 8 Stages

Display specifications

Type	Liquid crystal display with backlight
Digits	4 digit to show electrical parameter

Input specifications

Rated input voltage	50 to 520V AC
Rated input current range	Nominal 5A AC (Min 50mA , Max 6A) 1 CT Sensing
Frequency	45 - 65 Hz
Wiring Input	2P2W
Power Consumption	7VA Max
Controlling range	Target PF : -0.800 to +0.800
Switching Program	Automatic
Max Number of Steps	1 to 8
Resolution	Voltage : 1V
	Current : 0.1V
POWER CONSUMPTION	15VA Max

Output specifications

Mounting	Panel Type
Dimension	96 x 96mm
Housing Material Type	Local PC

Environmental specifications

Temperature	Operating : 0°C to 60°C ; Storage : - 20°C to 60°C ; Humidity: 0% to 95% without moisture consideration

Mechanical specifications

Mounting	Panel mount
Weight	263 gms

Dimensions (in mm)

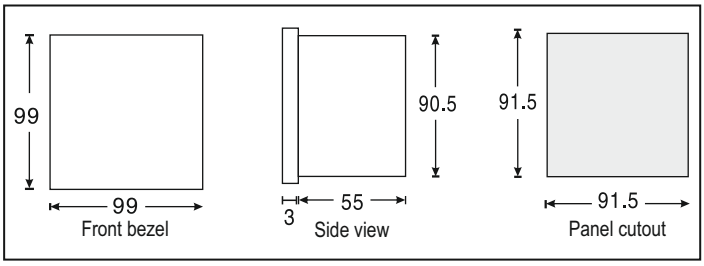

Terminal Connection

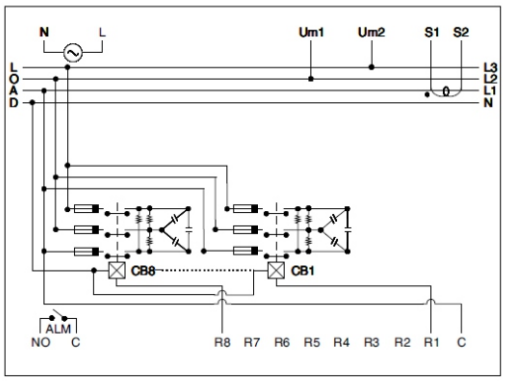

Compliance

Applicable EMI / EMC standards		
Product standard : IEC 60947-1		
Category		**Standards compliance**
ESD immunity	IEC 61000-4-2	Level III (Air Discharge , 8 kV) ; Level II (Contact Discharge , 4kV)
Surge immunity	IEC 61000-4-5	2kV Common Mode (Line to ground); 1kV differential mode (Line to line)
Radiated susceptibility	IEC 61000-4-6	Level III(150kHz to 80MHz) (10V/m)
Voltage dips and interruptions	IEC 61000-4-11	**Dips :** 0% during 0.5 cycle (Criteria B); 0% during 1 cycle (Criteria B); 40% during 10 cycle (Criteria B) ; 70% during 25 cycle (Criteria B); 80% during 250 cycle (Criteria B) **Interruptions :** 0% during 250/300 cycles (Criteria C)
Conducted Emission	CISPR 11	Group 1, Class A (150 kHz to 30 MHz)
Radiated Emission	CISPR-11	Group 1, Class A (30 MHz to 1 GHz)
Electrical Fat Transien	IEC 61000-4-4	Level III ; 2kV
Power Frequency Magnetic Field	IEC 610004-8	Continuous Field Level IV ; 30A/m ; Short Duration level IV : 300 A/m

Ordering information

Product code	Supply voltage	No. of stages	Certification
APFC346-108-230V-CE	85 - 270V AC, 50 - 60Hz	8	CE