OP897-V02

RSS-TA1A140ZP/ RSS-TA1A125ZP

Operating Instructions

44.50 X 57.50

PRODUCT DESCRIPTION

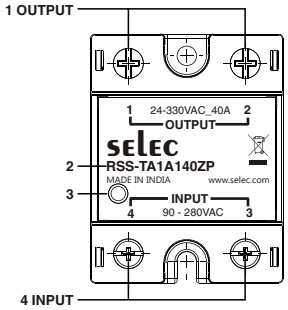

1 - Load output connection screw (M5) terminals
2 - Indication area for product label or markings
3 - Control input voltage LED indicator
4 - Control input connection screw (M4) terminals

SPECIFICATION

INPUT

- Control Input Voltage : 90 - 280VAC
- Nominal input impedance : 11k Ohms
- Must operate voltage : 90VAC
- Must release voltage : 45VAC
- Maximum turn-on time : 1½ cycle + 1ms
- Maximum turn-off time : 1½ cycle + 1ms
- Zero crossing turn-on : Available

OUTPUT

- RMS on-state current(I_T) : 40A / 25A
- Load voltage range : 24-330VAC
- Minimum load current : 100mA
- Off-state leakage current : 10mA max(at 330VAC)
- On-state voltage drop : 1.5V(RMS)max
- Operating frequency range : 47 - 63Hz
- Minimum power factor : 0.5
- Repetitive peak Off-state Voltage(V_{DRM}) : 800V

Non-repetitive peak On-state Current(I_{TSM})

- For I_T = 40A : 400A
  For I_T = 25A : 250A
- Rate of rise of Off-state Voltage($\frac{dV}{dt}$) : 500 V/µs

General specification

- Dielectric strength : 4000VAC,50/60Hz for 1min
- Ambient temperature : Operating : - 30 °C to 80 °C
  Storage : - 30 °C to 100 °C
- Ambient humidity : 93% non-condensing
- Pollution degree : II
- Installation category : III
- Dimensions(lxwxh)mm : 44.5 x 57.5 x 27.3
- Mounting type : Panel
- Product Weight : Approx 87 g
- Product Application : For heater control or resistive & slightly inductive load

ORDER CODE INFORMATION

Product	Max Load Current	Max Load Voltage	Certification
RSS-TA1A140ZP	40A	24-330VAC	–
RSS-TA1A125ZP	25A		–

WARNING

WARNING :

- Minor human hazard by electric shock may occasionally occur.
- Minor hazard by burns may occasionally occur.
- Heat sink must be used when SSR has to switch a load current above 4A.
- Heat sink must be connected to ground in the end product.

CAUTION

CAUTION :

- Disconnect all power supply before servicing equipment.
- Do not touch the SSR or the heat sink either while the power supply is ON or immediately after the power is turned OFF. The SSR and the heat sink may be hot.
- Do not touch the SSR main circuit terminals immediately after the power is turned Off. The internal snubber circuit is charged.
- SSR may occasionally rupture in case of short circuit.To protect against short-circuit accident, install a protective device, such as a quick-burning fuse or a circuit breaker.
- Never touch the terminals of the SSR while the power supply is turned ON.

SAFETY PRECAUTIONS

All safety related codifications, symbols and instructions that appear in this operating manual or on the equipment must be strictly followed to ensure the safety of the operating personnel as well as the Instrument.

Mounting

- Mount SSR in the orientation such that the heat sink fins are always positioned in vertical orientation in order to ensure proper heat ventilation & do not obstruct air flow to the SSR heat sink. Air convection for SSR is necessary.
- If a material with high thermal resistance is used for heat sink,heat generated by SSR may occasionally cause fire or burning.
- When installing SSR directly into a control panel such that the panel can be used as a heat sink, use a panel material with low thermal resistance such as Aluminium / Steel.
- Tighten the SSR screws securely. Loose terminals generate abnormal heat which may result in fire.

WIRING

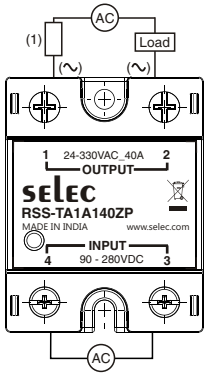

FUSE INFORMATION

Product	(1) Suitable Fuse
RSS-TA1A140ZP	45A Class J
RSS-TA1A125ZP	30A Class J

WIRING GUIDELINES

- Ensure the use of proper cable sizes. Abnormal heating of wire may cause burning.
- Do not use wire with broken sheaths. It may cause electric shock.
- Use cable with crimp terminals of appropriate size for terminations.
- Heat generated by incorrect terminations may result in fire.
  Loose terminals generate abnormal heat which may result in fire.
- Tighten screws to the specified torque. Re-tighten after 48 hours to minimize wire cold flow. Re-torque every 3 to 6 months.
- When tightening terminal screws ensure no non-conductive foreign matter is caught in screw.
- Be sure to conduct wiring with power supply turned off. Touching the terminals when they are charged may occasionally result in minor electric shock.

TIGHTENING TORQUE

SCREW SIZE	TIGHTENING TORQUE
M4 screws(Control Input)	1.2N-m
M5 screws (Load Output)	2.0N-m

USAGE

- Always use SSR within its rated specifications,otherwise malfunction, damage or fire may result.
- Select a load within the rated range.Inappropriate load may cause misoperation , trouble or burning.
- Select the power supply within the rated frequency range. Inappropriate power frequency may cause misoperation , trouble or burning.
- Use of SSR in domestic environments may cause radio interference,in this case the user may be required to employ additional mitigation methods.

DIMENSION(mm)

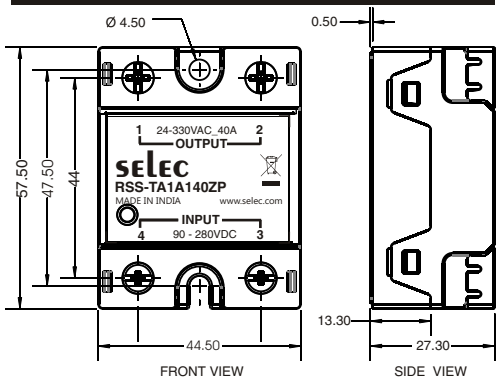

DERATING CURVE

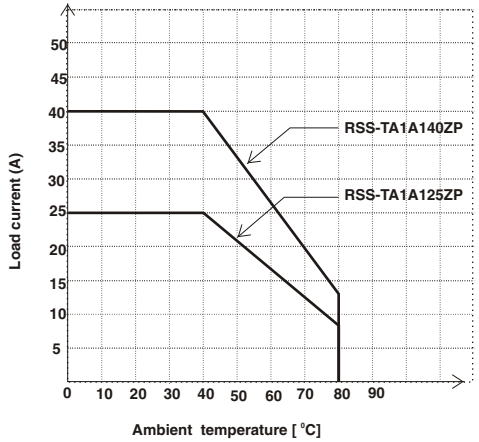

Note.: Heat sink used with a radiation efficiency of 1 °C/W

(Specifications are subject to change, since development is a continuous process.)

Selec Controls Pvt. Ltd., India

Factory Address :
EL-27/1, Electronic Zone, TTC Industrial Area,
MIDC, Mahape, Navi Mumbai - 400 710, INDIA.
Tel. No. : +91-22-41 418 468/41 418 452
Fax No. : +91-22-28471733 | Toll free : 1800 227 353
Website : www.selec.com | Email : sales@selec.com