selec

bum cibu O
Operating Instr

1. PRODUCT PROFILE

Figure 1.1 : Front view

2. DESCRIPTION

- EXP-FLEX 2M is an expansion module for use in conjunction with specific Selec PLCs (with RS485 Master Communication)
- Use to enhance I/O Configuration
- Any Flexys I/O card can be configured (one per device)
- Upto 7 numbers of FLEX 2M devices can be connected to a Master PLC
- Two baud rate selections 115200 & 19200
- RS485 Slave INs & OUT terminals (for easy loop & wiring)
- 4 LED indicators
- Four way DIP switch for Slave ID & Baud rate selection

3. ELECTRICAL SPECIFICATIONS

Supply Voltage	24VDC ±10 %
Power Consumption	2.5 W
Reverse polarity protection	Yes
Isolation	No (between power circuit and communication circuit)

FUNCTIONAL SPECIFICATIONS

Response time	100 ms to 2 sec based on number of FLEX 2M EXP devices configured + I/O card type

DIP SWITCH SETTINGS

Slave ID	DIP SWITCH 1	2	3	4
NA	X	OFF	OFF	OFF
1		OFF	OFF	ON
2		OFF	ON	OFF
3		OFF	ON	ON
4		ON	OFF	OFF
5		ON	OFF	ON
6		ON	ON	OFF
7		ON	ON	ON
Baud Rate				
19200	OFF	X	X	X
115200	ON	X	X	X

LED Display

LED Name	LED COLOR	INDICATION
Power LED (PWR)	Green	Always ON when device is powered
Receive LED (Rx)	Green	Blinks when FLEX 2M device receives RS485 command from master
Transmit LED (Tx)	Red	Blinks when FLEX 2M device transmits RS485 response to master
Error LED (Err)	Red	ON when I/O card is not connected
		Flashing 2 sec ON, 0.3 sec OFF when I/O card is mismatched *1
		Flashing 0.3 sec ON, 0.3 sec OFF when No Master communication is received for 6 secs
		OFF successful operation

*1 : When configured I/O card in SELPRO software is different from connected I/O card in FLEX 2M

COMMUNICATION

Communication Port	RS485 slave
Communication Protocols	Proprietary
Baud Rate	19200 and 115200 (User configurable) (Deafult = 19
Fixed settings	Parity = None(N), Stop bits = 1, Data lengt

MECHANICAL SPECIFICATIONS

Dimension (W x H x D)	35 mm x 90 mm x 88 mm
Weight (g)	87.1
Mounting	Din Rail Mounting

ENVIRONMENTAL CONDITIONS

Operating temperature	0° to 50°
Storage temperature	-20° to 70°
Humidity (non-condensing)	10% to 95% RH

SOFTWARE DETAILS

R : Read

- Configure FLEX 2M device for a given Controller using SELPRO software.
  For details of the software and configuration method, please
  manual.
- Auto generated registers in SELPRO software as shown below
  b FL-SC-RO08 card is configured in FLEX 2M EXP device via SELPRO software with Slave ID=1.

Register Name	Attributes	Description
ER_MOD_ID_U1	R	I/O card module ID (unique for each type of
ER_EXP_Ver_U1	R	Expansion module version number
ER_IO_Ver_U1	R	I/O card version number
ER_SlotStatus_U1	R	Slot Status S=0 : refers to Slot empty S=15 : refers to Slot ready S-=Other than 0 and 15 : Contact V
ER_SlotErrorCntr_U1	R	Slot error counter
ER_Modbus Error_U1	R	Modbus communication error (0 / 10 = comm
ER_RO8_OUT0_U1	R	Card specific variables
ER_RO8_OUT1_U1		
ER_RO8_OUT2_U1		
ER_RO8_OUT3_U1		
ER_RO8_OUT4_U1		
ER_RO8_OUT5_U1		
ER_RO8_OUT6_U1		
ER_RO8_OUT7_U1		

4. INSTALLATION PROCEDURE

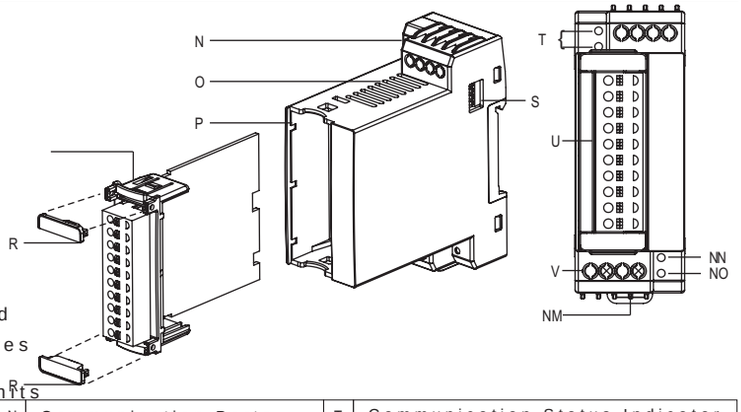

N	Communication Ports	T	Communication Status Indicator
O	Ventilation grills	U	Spring type pluggable terminal block (5.0
P	Slot for FL-SC-XX card	V	Power Supply Connector
	Fascia	NM	Clamp
R	Card lock	NN	Power Indicator
S	DIPSwitch Selector	NO	Error Indicator

klqb W 1) When installing, insert the card into the slot until you hear an a
2) Ensure that I/O card installed is same as the one defined in Lad
3) Place Card lock to prevent movement of card from base unit.

Follow these steps to remove the I/O card from base unit :
1. Remove both the Card locks
2. Press at the top and bottom part of fascia and pull the card from

Dimensions

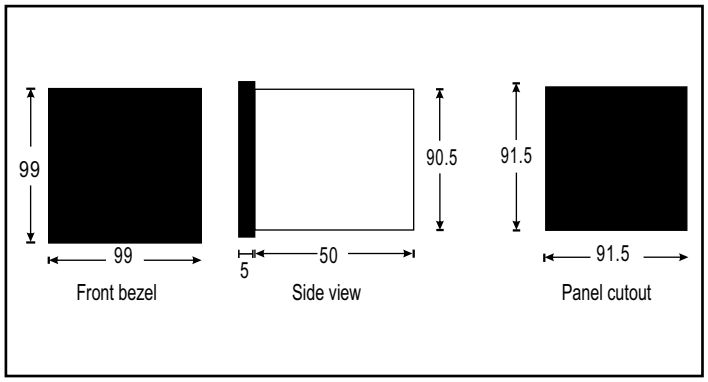

Terminal Connection

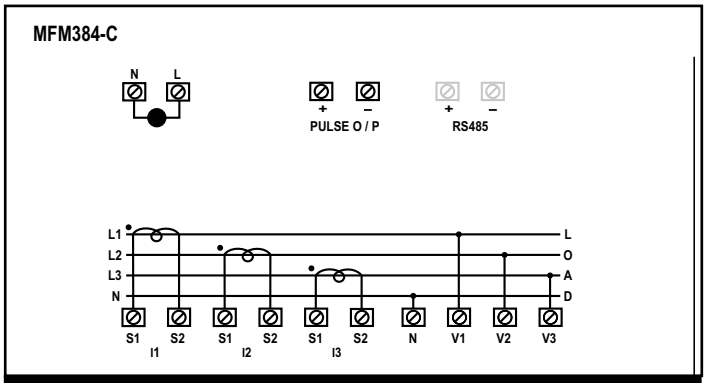

Compliance

Category		Standards Compliance
ESD Immunity	IEC 61000 - 4 - 2	Level IV (Air Discharge : 15kV), (Contact Discharge : -8kV)
Surge Immunity	IEC 61000 - 4 - 5	+ / - 2kV Common Mode, (Line to Ground) + / - 1kV Differential Mode, (Line to Line)
Radiated Susceptibility	IEC 61000 - 4 - 3	Level III, 80 to 1000MHz (10V / m) Level II, 1.4GHz to 2GHz (3V / m) Level I, 2GHz to 2.7GHz (1V / m)
Conducted Susceptibility	IEC 61000 - 4 - 6	Level II (3V / m)
Voltage Dips and Interruptions	IEC 61000 - 4 - 11	**Dips** : 0% residual voltage / 1 cycle (Criteria B), 40% residual voltage / 10 cycles 50Hz / 12 cycles 60Hz (Criteria C) 70% residual voltage / 25 cycles 50Hz / 30 cycles 60Hz (Criteria C) **Interruptions** : 0% residual voltage / 250 cycles 50Hz / 300 cycles 60Hz (Criteria C)
Conducted Emission	CISPR - 11	
Radiated Emission	CISPR - 11	
Electrical Fast Transient	IEC 61000 - 4 - 4	Level III (2kV)

Ordering Information

CE

CE