Features:

- Selable Terminal / Wire type Output
- Panel Mount
- Accuracy : Class 1 to 5

Input / Output Specifications

Rated primary rating	30A to 600A
Rated secondary output	5A

Technical Specifications

Rated burden	1.5VA to 5VA
Class of accuracy	1 to 5
Thermal Nominal Continuous Rated Current (Icth)	120% of In
Thermal short circuit current (Ith)	Ith=60 X In for 1 sec
Instrument security factor	FS<5
Insulation class	B
Max operating voltage (Um)	720V maximum
Isolation test voltage	3kV AC 1 min
Nominal rated frequency	AC 50Hz
Max. lugs size	8mm
Frequency	50/60Hz

Mounting modes	Panel Mount

Standard

Applicable standard	IEC 61869-2

Dimension (All are in mm)

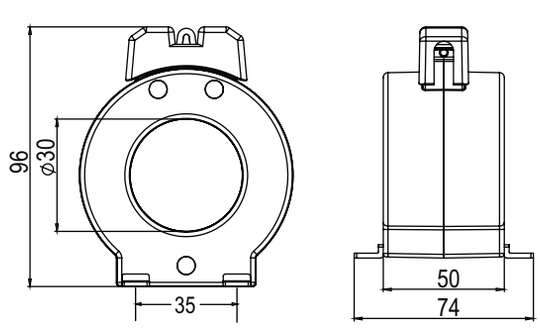

RCT-T-D30

Dimension (All are in mm)

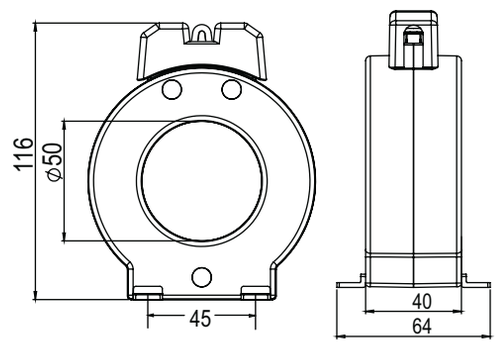

RCT-T-D50

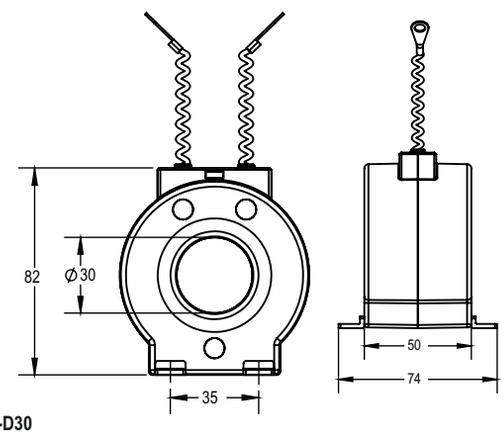

RCT-W-D30

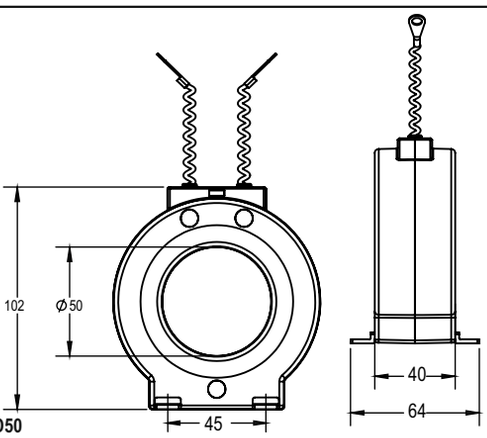

RCT-W-D50

Ordering Information

PRODUCT CODE	WIRE APERTURE In mm	CURRENT RATIO	BURDEN IN VA	ACCURACY CLASS	NO OF PRIMARY TURNS
RCT-T-D30-30/5 A VA 1.5 CL5	DIA 30	30/5	1.5	5	---
RCT-T-D30-30/5 A VA 5 (2T) CL5	DIA 30	30/5	5	5	2
RCT-T-D30-50/5 A VA 5 CL5	DIA 30	50/5	5	5	---
RCT-T-D30-75/5 A VA 5 CL5	DIA 30	75/5	5	5	---
RCT-T-D30-100/5 A VA 5 CL1	DIA 30	100/5	5	1	---
RCT-T-D30-150/5 A VA 5 CL1	DIA 30	150/5	5	1	---
RCT-T-D50-200/5 A VA 5 CL1	DIA 50	200/5	5	1	---
RCT-T-D50-250/5 A VA 5 CL1	DIA 50	250/5	5	1	---
RCT-T-D50-300/5 A VA 5 CL1	DIA 50	300/5	5	1	---
RCT-T-D50-400/5 A VA 5 CL1	DIA 50	400/5	5	1	---
RCT-T-D50-500/5 A VA 5 CL1	DIA 50	500/5	5	1	---
RCT-T-D50-600/5 A VA 5 CL1	DIA 50	600/5	5	1	---
RCT-W-D30-30/5 A VA 1.5 CL5	DIA 30	30/5	1.5	5	---
RCT-W-D30-30/5 A VA 5 (2T) CL5	DIA 30	30/5	5	5	2
RCT-W-D30-50/5 A VA 5 CL5	DIA 30	50/5	5	5	---
RCT-W-D30-75/5 A VA 5 CL5	DIA 30	75/5	5	5	---
RCT-W-D30-100/5 A VA 5 CL1	DIA 30	100/5	5	1	---
RCT-W-D30-150/5 A VA 5 CL1	DIA 30	150/5	5	1	---
RCT-W-D50-200/5 A VA 5 CL1	DIA 50	200/5	5	1	---
RCT-W-D50-250/5 A VA 5 CL1	DIA 50	250/5	5	1	---
RCT-W-D50-300/5 A VA 5 CL1	DIA 50	300/5	5	1	---
RCT-W-D50-400/5 A VA 5 CL1	DIA 50	400/5	5	1	---
RCT-W-D50-500/5 A VA 5 CL1	DIA 50	500/5	5	1	---
RCT-W-D50-600/5 A VA 5 CL1	DIA 50	600/5	5	1	---

For Ordering: e.g.200/5 ratio, VA 5, CL 1
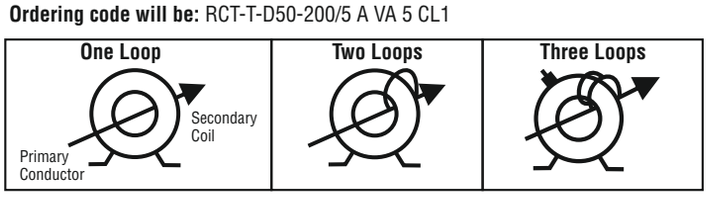
Ordering code will be: RCT-T-D50-200/5 A VA 5 CL1