MFM28
rating Instr

ORDERCODE INFORMATION		
Product	Supply	Certification
MFM284-CE-RoHS	85 to 270 VAC, -15% +10%, 120 to 50 / 60 Hz,	CE
Installation Category	III	

SERIAL COMMUNICATION	
Interface and Protocol	RS485 and MODBUS RTU
Addresses	1 to 255
Transmission mode	Half duplex
Data types	Float and Integer
Maximum parameters	125 maximum
Transmission speed	1200, 2400, 4800, 9600 (in bps)
Parity	Even
Stop bits	1

ACCURACY		
M		
Voltage		
Voltage		
C		
	1K	1K
<1000	0.0M	0.0M
<1000	0.1M	0.1M
≥15000	1M	1M

NOTE 1) For Voltage, Current and Power, range is automatically adjusted.
2) For power factor is 0.0015.

- Ø - wi
rammable
Installation Category
NT
1, Max 6A)
ase
0 (Programmable from
10,000 A. Secondary is
ry is 5 to 10,000 A
ONDARY
1A or 5A (programmable)
PT PRIMARY
100V to 500kV (Program
PT SECONDARY
100 to 500V AC (L-L)(P
Display update time
1 sec. for all parame
Display Scrolling
Automatic, Default
POWER CONSUMPTI
Less than 8V
ENVIRONMENTAL CONDI
- Indoor use
- Altitude of
- Pollution
Temperature: Ope
Sto 70 °C
Humidity: U non-condensing
PROTECT ASS :
MOUNTI el mounting
OUTPU
Pul Output voltage range External 24V DC max.
Current max capacity : 100mA
se Width ± 50ms (Programmable
depending upon CT
ratio)

SAFETY PRECAUTIONS

All safety related codifications, symbols and instructions appearing in this operating manual or on the equipment must strictly followed to the safety of the operating personnel as well as the instrument. If the equipment is not used in a manner specified by the manufacturer, the protection provided by the equipment may be impaired.

- Do not use the equipment if there is any mechanical damage.
- Ensure that the equipment is supplied with correct voltage.

CAUTION :

1. Read complete instructions prior to installation and operation of the unit.
2. Risk of electric shock.
3. The equipment intended to be installed must not come in close proximity to any heating source, oil, steam, caustic vapors or other unwanted process by products.

WIRING GUIDELINES

WARNING :

1. To prevent the risk of electric shock, power supply to the equipment must be kept OFF while doing the wiring arrangement.
Wiring should be done strictly according to the terminal out. Confirm all connections are correct.
ged terminals.
electromagnetic interference, use wires with
ing and twists of the same equal size
shorter connections.
ting cables should be away from any
power source must have
mm² (20 to 14 AWG; 75°C
have current capacity carrying
N
ferrite core
sensor
ce.
between power source and supply
power ON or OFF function. However, this switch or breaker must be installed in a convenient position normally accessible to the operator.
4. Before disconnecting the secondary of the external current transformer to the equipment make sure that the current transformer circuit is open to avoid risk of electrical shock and injury.
5. The equipment shall be installed in environmental conditions other than those mentioned in this manual.
6. The equipment does not have a built-in-fuse. Installation external fuse of 275 V AC, 5 Amp for electrical safety is highly recommended.

MECHANICAL INSTALLATION

For installing the meter
1. Prepare the panel cut out with proper dimensions as shown below.
2. Push the meter into the panel cut out. Secure the meter in its place by fitting the clamp on the rear side. Fit clamps on both sides diagonally opposite for optimum fitting.
3. For proper sealing, tighten the screws evenly with the required torque.

OUTLINE Dimensions (in mm)	PANEL CUT Dimensions (in mm)

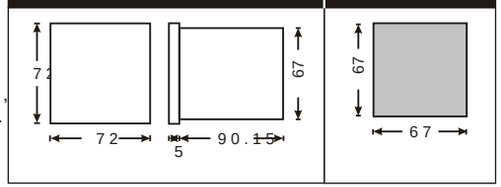

MAINTENANCE
1. The equipment should be cleaned regularly to avoid blockage of ventilation gaps.
2. Clean the equipment with a clean dry or d
Do not use cleaning agent other than wate

TERMINAL CONNECTIONS

CONNECTIONS DIAGRAM

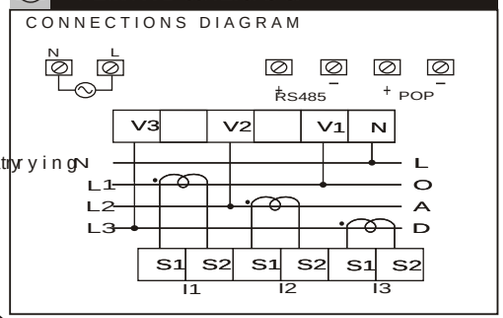

FRONT PANEL DESCRIPTION

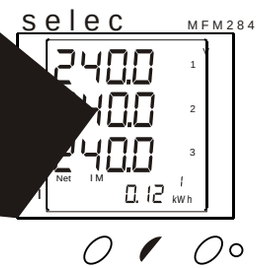

ONLINE PAGE DESCRIPTION

There are 4 dedicated keys labelled as V, I, VAF, PF/PE. Use these 4 keys to read meter parameters. Simply press these keys to read the parameters.

MODBUS REGISTER ADDRESSES LIST

Readable parameters for Communication Model Only : [Length (Register) : 2 ; Data Structure : Float]

Address	Hex Address	Parameter
30000	0x00	Voltage V1N
30002	0x02	Voltage V2N
30004	0x04	Voltage V3N
30006	0x06	Average Voltage LN
30008	0x08	Voltage V12
30010	0x0A	Voltage V23
30012	0x0C	Voltage V31
30014	0x0E	Average Voltage LL
30016	0x10	Current I1
30018	0x12	Current I2
30020	0x14	Current I3
30022	0x16	Average Current
30024	0x18	kW1
30026	0x1A	kW2
30028	0x1C	kW3
30030	0x1E	kVA1
30032	0x20	kVA2
30034	0x22	kVA3
30036	0x24	kVAr1
30038	0x26	kVAr2
30040	0x28	kVAr3
30042	0x2A	Total kW
30044	0x2C	Total kVA
30046	0x2E	Total kVAr
30048	0x30	PF1
30050	0x32	PF2
30052	0x34	PF3
30054	0x36	Average PF
30056	0x38	Frequency
30058	0x3A	Total kWh
30060	0x3C	Total kVAh
30062	0x3E	Total kVArh
30064	0x40	kW MAX Active Power
30066	0x42	kW MIN Active Power
30068	0x44	kVAr MAX Reactive Power
30070	0x46	kVAr MIN Reactive Power
30072	0x48	kVA MAX Apparent Power
30074	0x4A	MAX I1 Demand
30076	0x4C	MAX I2 Demand
30078	0x4E	MAX I3 Demand
30080	0x50	MAX Avg. I Demand
30082	0x52	Run Hour
30084	0x54	IMP kWh1
30086	0x56	IMP kWh2
30088	0x58	IMP kWh3
30090	0x5A	EXP kWh1
30092	0x5C	EXP kWh2
30094	0x5E	EXP kWh3
30096	0x60	Total IMP kWh
30098	0x62	Total EXP kWh
30100	0x64	IMP kVarh1
30102	0x66	IMP kVarh2
30104	0x68	IMP kVarh3
30106	0x6A	EXP kVarh1
30108	0x6C	EXP kVarh2

Address	Hex Address	Parameter
30110	0x6E	EXP kVarh3
30112	0x70	Total IMP kVarh
30114	0x72	Total EXP kVarh
30116	0x74	KVah1
30118	0x76	KVah2
30120	0x78	KVah3
		Total Harmonic Distortion (THD)
30124	0x7C	THD of Voltage V1N
30126	0x7E	THD of Voltage V2N
30128	0x80	THD of Voltage V3N
30130	0x82	THD of Voltage V12
30132	0x84	THD of Voltage V23
30134	0x86	THD of Voltage V31
30136	0x88	THD of Current I1
30138	0x8A	THD of Current I2
30140	0x8C	THD of Current I3
3068	40x2AC	Serial No.(Data structure: Hex)

Formula to find address of individual Harmonic

Constant Parameter	Meaning
0	Voltage V1N
1	Voltage V2N
2	Voltage V3N
3	Voltage V12
4	Voltage V23
5	Voltage V31
6	Current I1
7	Current I2
8	Current I3

{143 + [(Harmonic no-2) x 2] + 60 x Constant Parameter }

For Example,

To find the Harmonic address of 14th Harmonic of Voltage V31 following formula can be used :

Formula with the parameter :
{143 + [(Harmonic no-2) x 2] + 60 x C P}
Eg. {143 + [(14-2) x 2] + 60 x 5} = 467

So, Check the 14th Harmonic of Voltage V31 at 467 address.

MODBUS Register Read address list *continued*

Readable / writable parameters for Communication Model Only :

Address	Hex Address	Parameter	Range		Length (Register)	Data Structure
			Min value	Max value		
40000	0x00	Password	0	9998	1	Integer
			Value	Meaning		
40001	0x01	N/W selection	0	3P-4W	1	Integer
			1	3P-3W	1	Integer
			2	1P2W-P1	1	Integer
			3	1P2W-P2	1	Integer
			4	1P2W-P3	1	Integer
40002	0x02	CT Secondary (A)	1	5	1	Integer
40003	0x03	CT primary (CT Secondary = 5) (A)	5	10000	1	Integer
		CT primary (CT Secondary = 1) (A)	1	10000		
40004	0x04	PT Secondary (V)	100	500	1	Integer
40005	0x05	PT primary (V)	100	500000	2	Integer
40007	0x07	Slave id	1	255	1	Integer
			Value	Meaning		
40008	0x08	Baud rate (bps)	0x0000	300	1	Integer
			0x0001	600		
			0x0002	1200		
			0x0003	2400		
			0x0004	4800		
			0x0005	9600		
			0x0006	19200		
			Value	Meaning		
40009	0x09	Parity	0x0000	None	1	Integer
			0x0001	Odd		
			0x0002	Even		
40100	0x0A	Stop bit	0x0000	1	1	Integer
			0x0001	2		
40119	0x0B	Backlight OFF (sec.)	0	7200	1	Integer
40120	0x0C	Factory Default	1	Set to factory setting range	1	Integer
40130	0x0D	Reset kWh	1	Reset Total Active Energy	1	Integer
40140	0x0E	Reset kVAh	1	Reset Total Apparent Energy	1	Integer
40150	0x0F	Reset kVArh	1	Reset Total Reactive Energy	1	Integer
			Value	Meaning		
40160	0x22	Demand Interval Method	0X0000	Sliding	1	Integer
			0X0001	Fixed		
40170	0x23	Demand Interval Duration	Min Value : 1	Max Value : 30	1	Integer
40180	0x24	Demand Interval Length(min)	Min Value : 1	Max Value : 30	1	Integer
40190	0x25	Reset MAX/MIN Demand	1	Reset MAX/MIN Demand	1	Integer
40200	0x26	Reset Run Hour	1	Reset Run Hour	1	Integer
40210	0x26	Reset Auxillary Interupt	1	Reset Auxillary Interupt	1	Integer
40220	0x26	Pulse Weight (kWh)	0.01	99.99	1	Integer
40230	0x26	Pulse duration (Sec)	0.1	2	1	Integer

TYPICAL WIRING DIAGRAM

3 PHASE 4-WIRE (COMMONLY USED)

3 Ø - 4 WIRE, 3 CT S

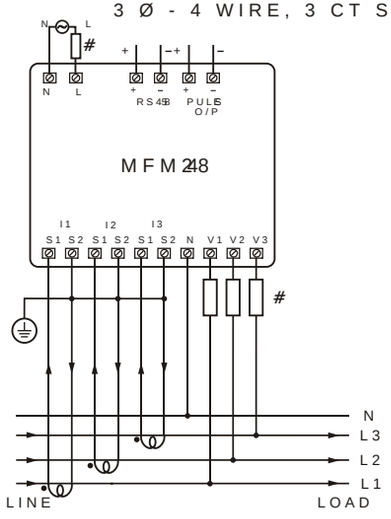

3 PHASE 3-WIRE

3 Ø - 3 WIRE, 2 CT S

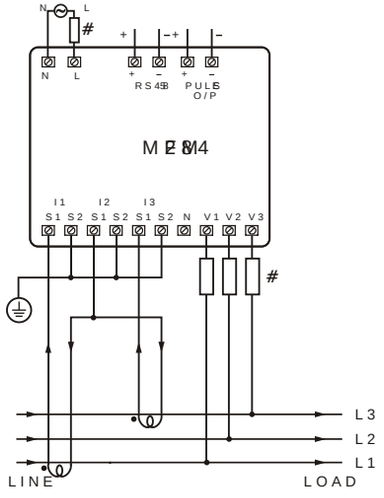

2 PHASE - 3 WIRE

2 Ø - 3 WIRE, 2 CT S

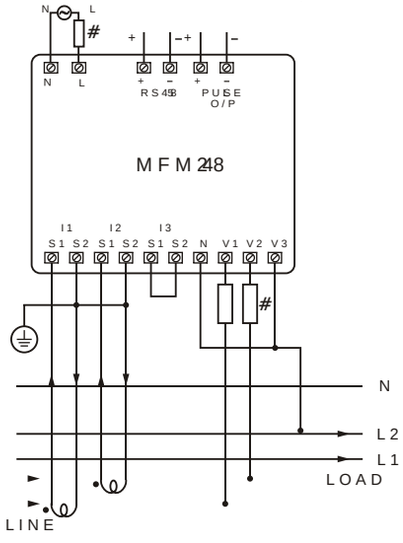

1 PHASE - 2 WIRE

1 Ø - 2 WIRE, 1 CT

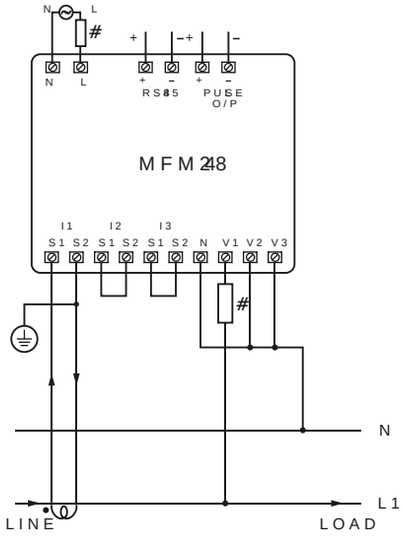

3 Ø - 4 WIRE, 3 CT S and 3 PT S

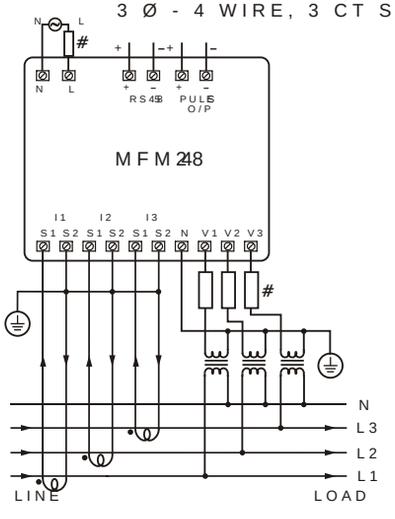

3 Ø - 3 WIRE, 2 CT S and 2 PT S

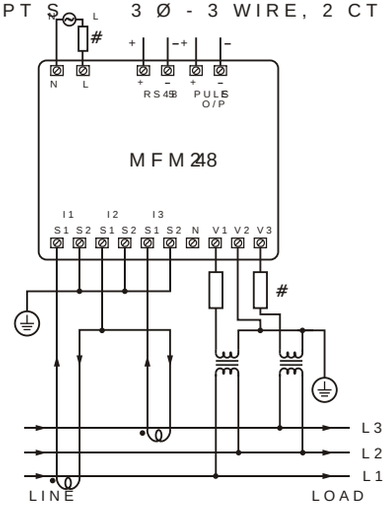

2 Ø - 3 WIRE, 2 CT S and 2 PT S

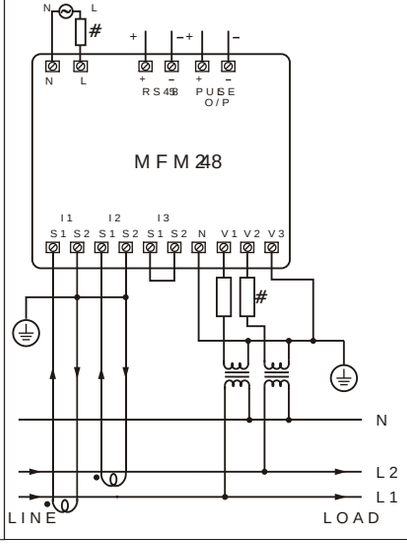

All fuse types: class 9 as 50 A type
0.5 A fast acting 600 V

CONNECTION DIAGRAM FOR COMMUNI

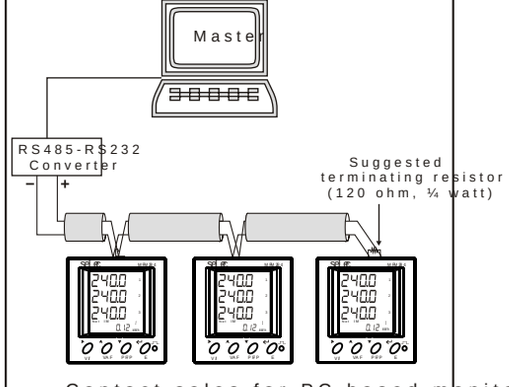

Contact sales for PC based monitoring software to communicate with the met

(Specifications subject to change as development is a continuous process)

Selec Controls Pvt. Ltd., India

Factory Address :
EL-27/1, Electronic Zone, TTC Industrial Area, MIDC, Mahape,
Navi Mumbai - 400 710, INDIA.
Tel. No. : +91-22-41 418 419/430 | Fax No. : +91-22-28471733
Toll free : 1800 227 353 (BSNL/MTNL Subscribers only)
Website : www.selec.com | Email : sales@selec.com